PI: **Moyer, Brian Evan**	Title: Portable Slip-Testing Device for Measuring Shoe-Floor Coefficient of Friction	
Received: 09/06/2016	FOA: PA16-302	Council: 01/2017
Competition ID: FORMS-D	FOA Title: PHS 2016-02 OMNIBUS SOLICITATION OF THE NIH, CDC, FDA AND ACF FOR SMALL BUSINESS INNOVATION RESEARCH GRANT APPLICATIONS (PARENT SBIR [R43/R44])	
9 R44 AG059258-02	Dual: HD,NR	Accession Number: 3967822
IPF: 10018761	Organization: CROSSROADS CONSULTING, LLC	
Former Number: 2R44AR064111-02	Department:	
IRG/SRG: ZRG1 MOSS-V (15)B	AIDS: N	Expedited: N
Subtotal Direct Costs (excludes consortium F&A) Year 2: [redacted] Year 3: [redacted]	Animals: N Humans: Y Clinical Trial: N Current HS Code: 30 HESC: N	New Investigator: Early Stage Investigator:
Senior/Key Personnel:	*Organization:*	*Role Category:*
Brian Moyer	Crossroads Consulting LLC	PD/PI
Kurt Beschorner Ph.D	University of Pittsburgh	MPI

Appendices

1254-Appendix

Additions for Review

Accepted Publication	Moyer.pdf	accepted publication

OMB Number: 4040-0001
Expiration Date: 06/30/2016

APPLICATION FOR FEDERAL ASSISTANCE
SF 424 (R&R)

3. DATE RECEIVED BY STATE

State Application Identifier

1. TYPE OF SUBMISSION*

❍ Pre-application ❍ Application ● Changed/Corrected Application

4.a. Federal Identifier
AR064111

b. Agency Routing Number

2. DATE SUBMITTED
2016-09-06

Application Identifier

c. Previous Grants.gov Tracking Number
GRANT12241763

5. APPLICANT INFORMATION

Organizational DUNS*: [redacted]

Legal Name*: Crossroads Consulting, LLC
Department:
Division:
Street1*: [redacted]
Street2:
City*: [redacted]
County: [redacted]
State*: [redacted]
Province:
Country*: [redacted]
ZIP / Postal Code*: [redacted]

Person to be contacted on matters involving this application
Prefix: Dr. First Name*: [redacted] Middle Name: [redacted] Last Name*: [redacted] Suffix: [redacted]
Position/Title: [redacted]
Street1*: [redacted]
Street2:
City*: [redacted]
County: [redacted]
State*: [redacted]
Province:
Country*: [redacted]
ZIP / Postal Code*: [redacted]
Phone Number*: [redacted] Fax Number: Email: [redacted]

6. EMPLOYER IDENTIFICATION NUMBER *(EIN) or (TIN)** [redacted]

7. TYPE OF APPLICANT* R: Small Business

Other (Specify):
Small Business Organization Type ● Women Owned ❍ Socially and Economically Disadvantaged

8. TYPE OF APPLICATION*
❍ New ❍ Resubmission
● Renewal ❍ Continuation ❍ Revision

If Revision, mark appropriate box(es).
❍ A. Increase Award ❍ B. Decrease Award ❍ C. Increase Duration
❍ D. Decrease Duration ❍ E. Other *(specify)* :

Is this application being submitted to other agencies?* ❍Yes ●No What other Agencies?

9. NAME OF FEDERAL AGENCY*
National Institutes of Health

10. CATALOG OF FEDERAL DOMESTIC ASSISTANCE NUMBER
TITLE:

11. DESCRIPTIVE TITLE OF APPLICANT'S PROJECT*
Portable Slip-Testing Device for Measuring Shoe-Floor Coefficient of Friction

12. PROPOSED PROJECT
Start Date* Ending Date*
05/01/2017 04/30/2019

13. CONGRESSIONAL DISTRICTS OF APPLICANT
[redacted]

SF 424 (R&R) APPLICATION FOR FEDERAL ASSISTANCE

14. PROJECT DIRECTOR/PRINCIPAL INVESTIGATOR CONTACT INFORMATION

Prefix: Dr. First Name*: Brian Middle Name: Evan Last Name*: Moyer Suffix:

Position/Title: Technical Director

Organization Name*: Crossroads Consulting LLC

Department:

Division:

Street1*: [redacted]

Street2:

City*: [redacted]

County:

State*:

Province:

Country*: USA: UNITED STATES

ZIP / Postal Code*: [redacted]

Phone Number*: [redacted] Fax Number: Email*: [redacted]

15. ESTIMATED PROJECT FUNDING

a. Total Federal Funds Requested* [redacted]

b. Total Non-Federal Funds* [redacted]

c. Total Federal & Non-Federal Funds* [redacted]

d. Estimated Program Income* [redacted]

16.IS APPLICATION SUBJECT TO REVIEW BY STATE EXECUTIVE ORDER 12372 PROCESS?*

a. YES ○ THIS PREAPPLICATION/APPLICATION WAS MADE AVAILABLE TO THE STATE EXECUTIVE ORDER 12372 PROCESS FOR REVIEW ON:

DATE:

b. NO ● PROGRAM IS NOT COVERED BY E.O. 12372; OR

○ PROGRAM HAS NOT BEEN SELECTED BY STATE FOR REVIEW

17. By signing this application, I certify (1) to the statements contained in the list of certifications* and (2) that the statements herein are true, complete and accurate to the best of my knowledge. I also provide the required assurances * and agree to comply with any resulting terms if I accept an award. I am aware that any false, fictitious, or fraudulent statements or claims may subject me to criminal, civil, or administrative penalties. (U.S. Code, Title 18, Section 1001)

● I agree*

** The list of certifications and assurances, or an Internet site where you may obtain this list, is contained in the announcement or agency specific instructions.*

18. SFLLL or OTHER EXPLANATORY DOCUMENTATION File Name:

19. AUTHORIZED REPRESENTATIVE

Prefix: [redacted] First Name*: [redacted] Middle Name: [redacted] Last Name*: [redacted] Suffix:

Position/Title*: Managing Director

Organization Name*: Crossroads Consulting LLC

Department:

Division:

Street1*: [redacted]

Street2:

City*: [redacted]

County:

State*:

Province:

Country*: [redacted]

ZIP / Postal Code*: [redacted]

Phone Number*: [redacted] Fax Number: Email*: [redacted]

Signature of Authorized Representative* [redacted]

Date Signed* [redacted]

20. PRE-APPLICATION File Name:

21. COVER LETTER ATTACHMENT File Name:1244-Cover_Letter.pdf

PHS 398 Cover Page Supplement

OMB Number: 0925-0001

Expiration Date: 10/31/2018

1. Human Subjects Section

Clinical Trial? ○ Yes ● No

*Agency-Defined Phase III Clinical Trial? ○ Yes ○ No

2. Vertebrate Animals Section

Are vertebrate animals euthanized? ○ Yes ● No

If "Yes" to euthanasia

Is the method consistent with American Veterinary Medical Association (AVMA) guidelines?

○ Yes ○ No

If "No" to AVMA guidelines, describe method and proved scientific justification

3. *Program Income Section

*Is program income anticipated during the periods for which the grant support is requested?

○ Yes ● No

If you checked "yes" above (indicating that program income is anticipated), then use the format below to reflect the amount and source(s). Otherwise, leave this section blank.

*Budget Period	*Anticipated Amount ($)	*Source(s)

Tracking Number: GRANT12243379

Funding Opportunity Number: PA-16-302 . Received Date: 2016-09-06T14:07:17.000-04:00

PHS 398 Cover Page Supplement

4. Human Embryonic Stem Cells Section

*Does the proposed project involve human embryonic stem cells? ○ Yes ● No

If the proposed project involves human embryonic stem cells, list below the registration number of the specific cell line(s) from the following list: http://grants.nih.gov/stem_cells/registry/current.htm. Or, if a specific stem cell line cannot be referenced at this time, please check the box indicating that one from the registry will be used:

Specific stem cell line cannot be referenced at this time. One from the registry will be used.

Cell Line(s) (Example: 0004):

5. Inventions and Patents Section (RENEWAL)

*Inventions and Patents: ○ Yes ● No

If the answer is "Yes" then please answer the following:

*Previously Reported: ○ Yes ○ No

6. Change of Investigator / Change of Institution Section

❑ Change of Project Director / Principal Investigator

Name of former Project Director / Principal Investigator

Prefix:

*First Name:

Middle Name:

*Last Name:

Suffix:

❑ Change of Grantee Institution

*Name of former institution:

Tracking Number: GRANT12243379

Funding Opportunity Number: PA-16-302 . Received Date: 2016-09-06T14:07:17.000-04:00

Project Summary:

Slip and fall accidents are a major and growing source of occupational injuries. Increasing the available coefficient of friction (ACOF) between the shoe and floor surface is an effective method for reducing slipping risk. A significant need exists for portable, cost-effective shoe-floor ACOF testing equipment that is valid for predicting slip risk. Filling this need is likely to increase the use of rigorous slip-testing in the field, customizing footwear programs to a specific workplace, and selecting the most effective footwear or flooring intervention. The **overall objective** of this SBIR Phase II (R44) research study is to develop a portable ACOF testing device that predicts whether a person is likely to slip with sensitivity and specificity. The feasibility of this approach is supported by preliminary development of a biofidelic slip-testing device. The potential for our approach to improve the validity of slip-testing is supported by preliminary data that found that current testing methods do not reflect the kinematics of slipping and that the under-shoe testing condition are critical to the tester's ability to predict slips. The proposed research will be accomplished with four aims: **Aim 1:** Identify a set of testing conditions (force, sliding speed and shoe-floor angle profiles) that best predict slip events; **Aim 2:** Develop a slip-tester that is portable, inexpensive and biofidelic; **Aim 3:** Quantify reproducibility and repeatability of the device using an interlaboratory study; and **Aim 4:** Validate the ability of the portable testing device to predict slipping events. Aim 1 will use previously-collected human slipping data and the biofidelic slip-tester to identify testing kinematics and kinetics that best predict slips. Aim 2 will create a portable device that uses kinematic linkage systems to achieve the testing conditions identified in Aim 1 using stepper motors and calculates ACOF based on forces measured with a load cell. Aim 2 will also include a hypothesis (H2.1) that the developed device will yield ACOF values that are well correlated with the biofidelic slip-testing device developed in Phase 1. Aim 3 will perform a multiple site interlaboratory study to quantify repeatability of the device and reproducibility across operators and devices. Aim 3 will include a hypothesis (H3.1) that differences in ACOF values will not be observed across operators and devices. Aim 4 will quantify the validity of the device for prospectively predicting human slip propensity based on ACOF data collected with the device. Aim 4 includes a hypothesis (H4.1) that the device will predict slipping risk. This proposed research is expected to lead to a state-of-the art device that will promote interventions that reduce accidental injuries due to slipping. Commercializing this innovation will position Crossroads Consulting, LLC to reach new markets for both laboratory and field slip-testing, targeting safety and occupational health consultants, smaller shoe and flooring manufactures, as well as the research community. As a result, Crossroads Consulting, LLC is anticipated to grow in size and revenues through product sales and service agreements.

Project Narrative:

Slip and fall accidents are a significant source injuries and fatalities for all age groups. Valid measurements of ACOF between shoes and flooring surfaces is essential to identify circumstances in need of intervention and identifying the optimal intervention. The purpose of this research is to develop a portable, valid and cost-effective design for measuring shoe-floor ACOF.

Equipment

The research team has access to the following equipment and software relevant to the proposed project:

- Biofidelic slip-tester
- Motion capture cameras: Vicon motion capture system (Vicon Motion Systems, Oxford, UK) with fourteen T40S infrared cameras
- Three Bertec forceplates (4060A, Bertec Inc., Columbus, OH)
- Solo-Step ceiling mounted harness system (Solo-Step Inc., Sioux Falls, SD)
- A2D converter/data acquisition device; 16 channels (NI USB-6229, National Instruments, Inc., Austin, TX)
- Anthropometry Measurement Kit
- Pin-on-disk tribometer (Contraves)
- Whole-shoe slip and wear -tester
- Variable incidence tribometer (English XL)
- 2D Stylus Profilometer (Taylor-Hobson Surtronic S100)
- Viscometer (Brookfield LVDVE 115)
- 3D scanner (FaroArm®Platinum)
- Material testing system (ATS 900 Series)
- 3D profilometer
- Digital still and high-speed video cameras
- 3D Printer (Lulzbot TAZ)
- Several desktop and laptop computers; server for data backup
- Microsoft Office 2013 Suite
- EndNote®
- LabView (National Instruments, Inc.; Austin, TX)
- Statistical Software (SAS v9.1, SPSS (17), Minitab)
- Matlab (The MathWorks, Natick, MA)
- Ansys
- Geomagic Studio
- LS-Dyna

OMB Number: 4040-0001
Expiration Date: 06/30/2016

RESEARCH & RELATED BUDGET - SECTION A & B, Budget Period 1

ORGANIZATIONAL DUNS*: [redacted]

Budget Type*: ● Project ○ Subaward/Consortium

Enter name of Organization: Crossroads Consulting, LLC

Start Date*: 05-01-2017 **End Date*:** 04-30-2018 **Budget Period:** 1

A. Senior/Key Person

	Prefix	First Name*	Middle Name	Last Name*	Suffix	Project Role*	Base Salary ($)	Calendar Months	Academic Months	Summer Months	Requested Salary ($)*	Fringe Benefits ($)*	Funds Requested ($)*
1 .	Dr.	[redacted]	[redacted]	[redacted]		PD/PI		[redacted]			[redacted]	[redacted]	[redacted]

Total Funds Requested for all Senior Key Persons in the attached file

Additional Senior Key Persons: File Name:

Total Senior/Key Person [redacted]

B. Other Personnel

Number of Personnel*	Project Role*	Calendar Months	Academic Months	Summer Months	Requested Salary ($)*	Fringe Benefits*	Funds Requested ($)*
	Post Doctoral Associates						
	Graduate Students						
	Undergraduate Students						
	Secretarial/Clerical						
1	Project Engineer	[redacted]			[redacted]	[redacted]	[redacted]
1	**Total Number Other Personnel**					**Total Other Personnel**	[redacted]
						Total Salary, Wages and Fringe Benefits (A+B)	[redacted]

RESEARCH & RELATED Budget {A-B} (Funds Requested)

Tracking Number:

Funding Opportunity Number: . Received Date:

RESEARCH & RELATED BUDGET - SECTION C, D, & E, Budget Period 1

ORGANIZATIONAL DUNS*: [redacted]

Budget Type*: ● Project ○ Subaward/Consortium

Organization: Crossroads Consulting, LLC

Start Date*: 05-01-2017 **End Date*:** 04-30-2018 **Budget Period:** 1

C. Equipment Description	
List items and dollar amount for each item exceeding $5,000	
Equipment Item	**Funds Requested ($)***
Total funds requested for all equipment listed in the attached file	
Total Equipment	
Additional Equipment: File Name:	

D. Travel	**Funds Requested ($)***
1. Domestic Travel Costs (Incl. Canada, Mexico, and U.S. Possessions)	[redacted]
2. Foreign Travel Costs	
Total Travel Cost	[redacted]

E. Participant/Trainee Support Costs		**Funds Requested ($)***
1. Tuition/Fees/Health Insurance		
2. Stipends		
3. Travel		
4. Subsistence		
5. Other:		
Number of Participants/Trainees	**Total Participant Trainee Support Costs**	

RESEARCH & RELATED Budget {C-E} (Funds Requested)

RESEARCH & RELATED BUDGET - SECTIONS F-K, Budget Period 1

ORGANIZATIONAL DUNS*: [redacted]

Budget Type*: ● Project ○ Subaward/Consortium

Organization: Crossroads Consulting, LLC

Start Date*: 05-01-2017 **End Date*:** 04-30-2018 **Budget Period:** 1

F. Other Direct Costs	Funds Requested ($)*
1. Materials and Supplies	[redacted]
2. Publication Costs	
3. Consultant Services	
4. ADP/Computer Services	
5. Subawards/Consortium/Contractual Costs	[redacted]
6. Equipment or Facility Rental/User Fees	
7. Alterations and Renovations	
8 . CAD Software License	[redacted]
9 . Machine Shop Time	[redacted]
Total Other Direct Costs	[redacted]

G. Direct Costs	Funds Requested ($)*
Total Direct Costs (A thru F)	[redacted]

H. Indirect Costs

Indirect Cost Type	Indirect Cost Rate (%)	Indirect Cost Base ($)	Funds Requested ($)*
1 . Modified Total Direct Costs	[redacted]	[redacted]	[redacted]
		Total Indirect Costs	[redacted]

Cognizant Federal Agency

(Agency Name, POC Name, and POC Phone Number)

I. Total Direct and Indirect Costs	Funds Requested ($)*
Total Direct and Indirect Institutional Costs (G + H)	[redacted]

J. Fee	Funds Requested ($)*
	[redacted]

K. Budget Justification*	File Name: 1234-Budget Justification.pdf
	(Only attach one file.)

RESEARCH & RELATED Budget {F-K} (Funds Requested)

OMB Number: 4040-0001
Expiration Date: 06/30/2016

RESEARCH & RELATED BUDGET - SECTION A & B, Budget Period 2

ORGANIZATIONAL DUNS*: [redacted]

Budget Type*: ● Project ○ Subaward/Consortium

Enter name of Organization: Crossroads Consulting, LLC

Start Date*: 05-01-2018 **End Date*:** 04-30-2019 **Budget Period:** 2

A. Senior/Key Person

	Prefix	First Name*	Middle Name	Last Name*	Suffix	Project Role*	Base Salary ($)	Calendar Months	Academic Months	Summer Months	Requested Salary ($)*	Fringe Benefits ($)*	Funds Requested ($)*
1 .	Dr.	[redacted]	[redacted]	[redacted]		PD/PI		[redacted]			[redacted]	[redacted]	[redacted]

Total Funds Requested for all Senior Key Persons in the attached file

Additional Senior Key Persons: File Name:

Total Senior/Key Person [redacted]

B. Other Personnel

Number of Personnel*	Project Role*	Calendar Months	Academic Months	Summer Months	Requested Salary ($)*	Fringe Benefits*	Funds Requested ($)*
	Post Doctoral Associates						
	Graduate Students						
	Undergraduate Students						
	Secretarial/Clerical						
1	Project Engineer	[redacted]			[redacted]	[redacted]	[redacted]
1	**Total Number Other Personnel**					**Total Other Personnel**	[redacted]
						Total Salary, Wages and Fringe Benefits (A+B)	[redacted]

RESEARCH & RELATED Budget {A-B} (Funds Requested)

RESEARCH & RELATED BUDGET - SECTION C, D, & E, Budget Period 2

ORGANIZATIONAL DUNS*: [redacted]

Budget Type*: ● Project ○ Subaward/Consortium

Organization: Crossroads Consulting, LLC

Start Date*: 05-01-2018 **End Date*:** 04-30-2019 **Budget Period:** 2

C. Equipment Description	
List items and dollar amount for each item exceeding [redacted]	
Equipment Item	**Funds Requested ($)***
Total funds requested for all equipment listed in the attached file	
Total Equipment	
Additional Equipment: File Name:	

D. Travel	**Funds Requested ($)***
1. Domestic Travel Costs (Incl. Canada, Mexico, and U.S. Possessions)	[redacted]
2. Foreign Travel Costs	
Total Travel Cost	[redacted]

E. Participant/Trainee Support Costs		**Funds Requested ($)***
1. Tuition/Fees/Health Insurance		
2. Stipends		
3. Travel		
4. Subsistence		
5. Other:		
Number of Participants/Trainees	**Total Participant Trainee Support Costs**	

RESEARCH & RELATED Budget {C-E} (Funds Requested)

RESEARCH & RELATED BUDGET - SECTIONS F-K, Budget Period 2

ORGANIZATIONAL DUNS*: [redacted]

Budget Type*: ● Project ○ Subaward/Consortium

Organization: Crossroads Consulting, LLC

Start Date*: 05-01-2018 **End Date*:** 04-30-2019 **Budget Period:** 2

F. Other Direct Costs	Funds Requested ($)*
1. Materials and Supplies	[redacted]
2. Publication Costs	[redacted]
3. Consultant Services	
4. ADP/Computer Services	
5. Subawards/Consortium/Contractual Costs	[redacted]
6. Equipment or Facility Rental/User Fees	
7. Alterations and Renovations	
8 . CAD Software License	[redacted]
9 . Machine Shop Time	[redacted]
10 . Shipping	[redacted]
Total Other Direct Costs	[redacted]

G. Direct Costs	Funds Requested ($)*
Total Direct Costs (A thru F)	[redacted]

H. Indirect Costs

Indirect Cost Type	Indirect Cost Rate (%)	Indirect Cost Base ($)	Funds Requested ($)*
1 . Modified Total Direct Costs	[redacted]	[redacted]	[redacted]
		Total Indirect Costs	[redacted]

Cognizant Federal Agency
(Agency Name, POC Name, and POC Phone Number)

I. Total Direct and Indirect Costs	Funds Requested ($)*
Total Direct and Indirect Institutional Costs (G + H)	[redacted]

J. Fee	Funds Requested ($)*
	[redacted]

K. Budget Justification*	File Name: 1234-Budget Justification.pdf
	(Only attach one file.)

RESEARCH & RELATED Budget {F-K} (Funds Requested)

RESEARCH & RELATED BUDGET - Cumulative Budget

	Totals ($)
Section A, Senior/Key Person	[redacted]
Section B, Other Personnel	[redacted]
Total Number Other Personnel	[redacted]
Total Salary, Wages and Fringe Benefits (A+B)	[redacted]
Section C, Equipment	
Section D, Travel	[redacted]
1. Domestic	[redacted]
2. Foreign	
Section E, Participant/Trainee Support Costs	
1. Tuition/Fees/Health Insurance	
2. Stipends	
3. Travel	
4. Subsistence	
5. Other	
6. Number of Participants/Trainees	
Section F, Other Direct Costs	[redacted]
1. Materials and Supplies	[redacted]
2. Publication Costs	[redacted]
3. Consultant Services	
4. ADP/Computer Services	
5. Subawards/Consortium/Contractual Costs	[redacted]
6. Equipment or Facility Rental/User Fees	
7. Alterations and Renovations	
8. Other 1	[redacted]
9. Other 2	[redacted]
10. Other 3	[redacted]
Section G, Direct Costs (A thru F)	[redacted]
Section H, Indirect Costs	[redacted]
Section I, Total Direct and Indirect Costs (G + H)	[redacted]
Section J, Fee	[redacted]

Specific Aims:
Slips and fall accidents are an enormous human health problem that affect people regardless of age. Commonly, the initiating cause of a slip is insufficient friction forces between footwear and walkway surfaces compared to those required to support gait. Available coefficient of friction (ACOF) is the most common measure used to assess the friction that is available between a walkway surface and footwear. However, a significant need exists for commercially available products that measure ACOF with the necessary biofidelity, validity, affordability and portability required to achieve a widespread impact. The **central purpose** of this study is to develop a portable, low cost, biofidelic slip-tester and to validate its ability to predict human slips. This research builds on the proof of concept that was achieved in Phase I. Specifically, progress made in Phase I included development of a 3 degree of freedom slip-tester; development of a user interface to program and control the slip-tester; development of algorithms to achieve desired force, sliding speed and shoe-floor angle profiles; and demonstration of the impact of testing conditions on the ability to predict slips. The **rationale** for this Phase II research proposal is to deliver rigorous testing equipment to reach new markets, targeting those who cannot currently afford shoe-floor friction measurement equipment. These new markets include safety and health professionals and consultants, research labs, and small business anti-slip shoe and flooring producers. Reaching these new markets is expected to reduce slip and fall accidents through wider adoption of testing technology, to result in savings for organizations that invest in this technology, and to generate profit for Crossroads Consulting, LLC. Thus, successful completion of this Phase II SBIR grant is expected to lead to positive health and economic outcomes. The proposed project consists of 4 specific aims.

Specific Aim 1: Identify a set of testing conditions (force, sliding speed and shoe-floor angles) and data analysis methods that best predict slip events. Using existing unexpected slipping data from human subjects, we will identify a method that best predict slipping events. Specifically, logistic regression curves will be developed and the testing condition that minimizes error between predicted and actual slipping events will be identified. Also, the ACOF cutoff point that best balances sensitivity and specificity will be identified.
Objective 1.1: Identify the optimal testing conditions for predicting slips and quantify the sensitivity and specificity of this optimal set.

Specific Aim 2: Develop a slip-tester that is portable, inexpensive and biofidelic. The slip-tester will implement the optimal set of testing conditions that were identified in Aim 1. The cost and weight of the portable device will be lowered by reducing the real-time controllable degrees of freedom from 3 to 1 and including only the necessary functionality required to achieve the testing conditions identified in Aim 1. The mechanical validity of the device will be compared against the laboratory device that was developed during Phase I.
Objective 2.1: Create a device that weighs less than 24 kg and costs less than [redacted].
Hypothesis 2.1: Measurements across the devices will be well correlated ($r>0.9$) and will not have a slope that is significantly different than 1.

Specific Aim 3: Quantify reproducibility and repeatability of the device using an interlaboratory study. Establish inter-device variability and interlaboratory variability using 3 devices and 5 laboratories. An ANOVA will be used to determine whether any significant differences are observed across the devices and laboratories. The repeatability and reproducibility of the device will also be quantified.
Objective 3.1: Repeatability and reproducibility will be quantified.
Hypothesis 3.1: No statistically significant effects will be observed across operators or devices.

Specific Aim 4: Validate the ability of the portable testing device to predict slipping events. The device will be used to predict the slip rate of 3 shoes and 2 floor surfaces. Subjects will be randomly assigned to a shoe-floor combination and will be unexpectedly exposed to a liquid contaminant, while their slip outcome (slip/no slip) is observed. This data will be used to assess the sensitivity and specificity of the device prospectively.
Hypothesis 4.1: The ACOF measurements of the device will predict slip-risk.
Objective 4.1: The sensitivity and specificity of the device will be prospectively quantified.

Successful completion of this SBIR Phase II project is expected to lead to a design specification for the Shoe Tribometer for Enhancing Predictive Safety (STEPS) slip-tester device (available via an open hardware license), a complete build kit available for purchase, and licensed motor control and data collection software that will be sold to users. Hardware kits and software sales are expected to drive short-term revenue and growth, while support agreements and other services are expected to provide long-term revenue.

Research Strategy

A. Significance

The predicted lifetime cost of non-fatal and fatal falls occurring in 2013 was approximately $170 billion [1, 2]. Furthermore, falls lead to 31,000 unintentional deaths [3] and approximately 11 million injuries [4] each year. While significant previous research has focused on falling in elderly adults [5-8], falls are the first or second leading cause of nonfatal injuries treated in emergency departments for all age groups [9]. Workers' compensation costs for same level falls grew 42% between 1998 and 2010 [10] and the number of hospitalization injuries grew 10% between 2006 and 2013 [9, 11], indicating that existing solutions are insufficient for reducing falling accidents. Although few studies have examined the source of falls in the general population, existing data suggests that approximately 50% of occupational falling accidents [12] and 25% of independent older adult falling accidents [13] are initiated by a slipping event . Thus, prevention strategies that target slipping events in the general population are expected to reduce falls, fall-related injuries and costs.

A slip and fall event is initiated when the friction between the shoe and floor surface is less than the amount of friction required to sustain gait. The friction capacity between the shoe and floor surface is typically quantified by the available coefficient of friction (ACOF), which is the ratio of friction forces to normal force when the shoe is sliding relative to the floor [14-18]. Required coefficient of friction (RCOF) is a common measure of the friction required to sustain gait [19-22]. RCOF is a measure of the peak shear to normal force ratio shortly after heel contact during unperturbed gait [20, 23]. The mean RCOF across individuals tends to be in the range of 0.18 to 0.22 [24]. Studies have repeatedly demonstrated that the probability of a slip can be estimated based on ACOF [25, 26] or the difference between ACOF and RCOF [20, 25-27]. *In the proposed study, we will create a portable slip-testing device – the Shoe Tribometer for Enhancing Predictive Safety (STEPS) – that will yield valid ACOF measurements that are predictive of slipping probability.*

Measuring relevant ACOF values requires close approximation of the shoe-floor-contaminant conditions that are experienced in the environments where slipping is anticipated. Previous research has found that shoe tread design components such as hardness [28], depth [16, 29], wear [30], width [16, 31], and orientation [16, 31] influence shoe-floor ACOF. In addition, the size of the shoe sample has also been found to influence ACOF [32]. Floor features including the material [29, 33, 34] and roughness [35-37] are also known to influence ACOF. Fluid contaminants with higher viscosity fluids tend to lead to greater reductions in ACOF [14, 29, 34, 37, 38]. Complex interactions often occur between shoe, floor and fluid contaminants [18, 29, 39]. For example, previous research has indicated that dry ACOF is not particularly predictive of wet friction [18, 34, 37, 40] and that the flooring influences which footwear has the highest ACOF [18, 34]. Based on these complexities in shoe-floor ACOF testing, previous researchers have indicated that environmental fidelity, defined as simulating real shoe and environmental conditions is important in shoe-floor ACOF testing [41]. *The proposed research aims to develop a slip-tester that accommodates an entire shoe design and is portable in order to promote environmental fidelity in ACOF testing.*

ACOF tests are also sensitive to the under-shoe testing conditions, which suggests that achieving relevant ACOF values requires mimicking the dynamics that occur during a step or slip. The dynamic conditions that have been shown to influence ACOF are normal force [14, 15, 42], sliding speed [14, 15, 43, 44], shoe-floor angle [14, 15] and dwell time [42]. Furthermore, interactions exist between these testing parameters [14] suggesting that results from one set of parameters cannot be easily converted to a different set of parameters. A symposium of researchers have suggested mimicking the under-shoe conditions during a slip (i.e., biomechanical fidelity) [41]. *The proposed research will utilize under-shoe testing parameters that approximate under-shoe conditions of a slip in order to promote biomechanical fidelity.*

Existing technology for measuring ACOF currently does not meet the need for environmental and biomechanical fidelity. Current portable devices are insufficient because they do not simulate the contact region of a shoe. Portable slip-testing devices typically accommodate either a standardized footwear sample or a sample cut from a shoe that ranges in size between 25 mm diameter circle [45] or a 75 by 75 mm square [46] (Table 1). Furthermore, portable devices typically apply loads that are less than the under-shoe loads during a slip (<100N) [17]. Clearly, these devices do not mimic the shoe geometry or under-shoe conditions of slipping. Lastly, while some portable devices have been shown to differentiate across floors that are known to cause different rates of slipping [47, 48], these studies were conducted using a single shoe design that does not reflect a typical shoe. Thus, it remains unknown if these devices can differentiate between shoes that are known to cause different rates of slip events. The only whole-shoe device that is commercially available is the [redacted], which is not portable due to its mass of 250 kg [49]. Furthermore, the cost of the [redacted] device is too expensive ([redacted] [50] for many safety consultants, university labs and small footwear companies. Another device, the Portable Slip Simulator, is a whole-shoe portable device that could be a

possibility for portable whole-shoe testing. However, this device is not commercially available, contains several parts that are difficult to manufacture, requires the user to develop software to operate its linear motors and still has a mass of 51 kg [51]. Furthermore, the device has unnecessary weight and cost due to the fact that four linear electromagnetic motors are utilized in the design. Similarly, the device developed during Phase I (Section C.1.1.) is over-designed [52], which prevents it from being portable or cost-effective. *The purpose of this proposed research grant is to improve upon current slip-testing technology by creating a low-cost device and low-weight device that is capable of performing biofidelic slip-testing. This will be accomplished by reducing the number of actively controlled degrees of freedom from three to one; making the components of the design easier to build by substituting commercially-available T-slot erector set rails for custom-machined components; and providing a software package that can control the slip-tester. We expect that this approach will dramatically overcome a significant barrier in making slip-testing technology more portable and accessible.*

Table 1: List of slip-testing devices and features and validation analyses that have been performed.

Device	Measurement w/in 300 ms of foot contact?	Validated to predict slip risk across flooring?	Validated to predict slip risk across shoes?	Biofidelic forces, speeds and shoe angles?	Tests Whole Shoe	Commercially Available	Portable?	Mass (in kg)	Costs less than $25,000	Earliest reference to this device
[redacted]										[redacted]
Devices testing shoe samples										
[redacted]	No	No	No	No	No	No	No	>38	N/A	
[redacted]	No	Yes	No	No	No	Yes	Yes	8	Yes	
[redacted]	No	No	No	No	No	Yes	Yes	3	Yes	
[redacted]	No	No	No	No	No	Yes	No	14	Yes	
[redacted]	Yes	No	No	No	No	Yes	Yes	10	Yes	
[redacted]	Yes	Yes	No	No	No	Yes	Yes	5	Yes	
[redacted]	Yes	No	No	No	No	Yes	Yes	2	Yes	
[redacted]	Yes	No	No	No	No	Yes	Yes	13	Yes	
[redacted]	No	No	No	No	No	Yes	Yes	3	Yes	
Devices Testing Whole Sh										
[redacted]	Yes	No	Yes	Yes	Yes	No	No	*	N/A	
[redacted]	Yes	No	Yes	Yes	Yes	No	Yes	51	N/A	
[redacted]	Yes	No	No	Yes	Yes	No	No	*	N/A	
[redacted]	Yes	No	No	No	Yes	Yes	No	250	No	
[redacted]	Yes	Yes	Yes	Yes	Yes	Yes	Yes	<24	Yes	

*Mass information not available for [redacted].

B. Innovation

The proposed research has three areas of innovation. 1) A device will be developed that accommodates whole shoe testing, approximates loading patterns of slipping, and is portable. The first innovative aspect deviates from existing options since existing commercially available options either do not accommodate an entire shoe or are not portable (Table 1). 2) Kinematic linkage systems will be used to couple vertical and

horizontal motion so that only a single actively controlled degree of freedom is controlled. This approach is innovative since current whole shoe devices control motion in each direction with a separate motor [44, 51]. 3) Human slipping data will be used to select the most predictive set of testing conditions. This innovation goes beyond previous development efforts, which only considered mimicking the under-shoe dynamic conditions of other existing devices [51] or mimicking the biomechanics of a slip [14, 44, 59]. *Thus, we expect that the proposed STEPS device will achieve a high level of innovation relative to existing slip-testers that are currently on the market.*

C. Approach

The proposed research utilizes four aims that will lead to a valid, portable, and precise device. The project will identify optimal testing conditions for predicting slips (Aim 1); develop and mechanically validate a portable slip-tester (Aim 2); assess the precision (i.e., repeatability and reproducibility) in the developed device (Aim 3); and prospectively quantify the ability of the device to predict slips (Aim 4). Aim 1 will be accomplished by systematically modifying test conditions using the biofidelic slip-tester that was developed in Phase I of the grant and determining the best set of testing conditions for predicting slips based on existing human slip data. Aim 2 will create a new device that minimizes weight and cost while ensuring it is capable of applying the optimal testing conditions that were identified in Aim 1. Aim 3 will utilize an interlaboratory study to quantify the repeatability and reproducibility of the portable device. Lastly, Aim 4 will collect human slipping data in order to prospectively quantify the sensitivity and specificity of the device to predict the occurrence of slip events.

C.1. Progress Made during Phase I

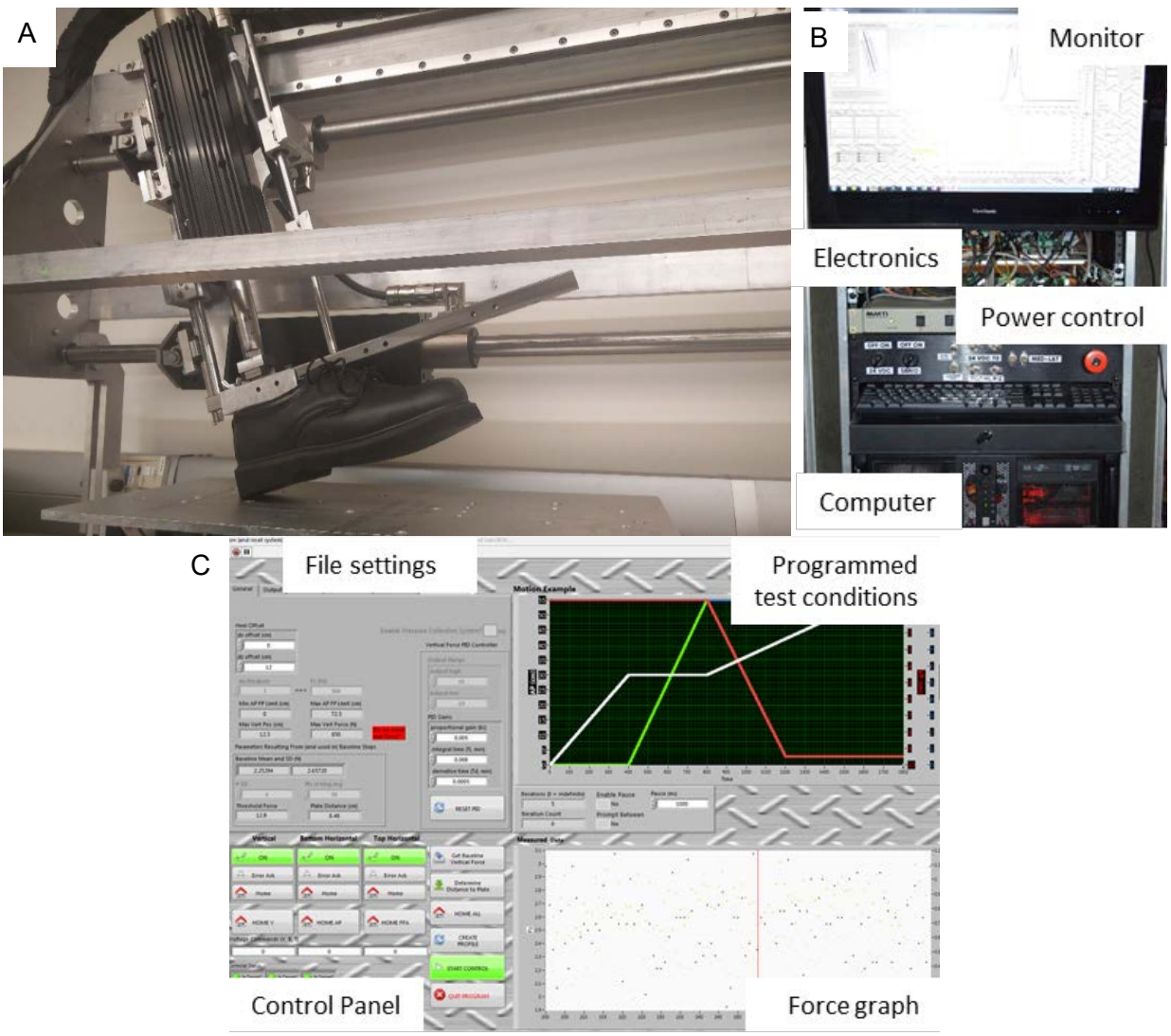

Fig. 1: Biofidelic slip-tester including the mechanical robotic device (A), the device controller (B) and the software interface (C). This device, which was developed in Phase I, serves as proof-of-concept of our approach.

During Phase I of this project, we made significant progress in developing a proof-of-concept slip-tester and gained foundational knowledge required for subsequent development. Specifically, we developed a biofidelic slip-tester (Fig. 1A), the associated electronic system (Fig. 1B) and a user-interface for implementing different test conditions and measuring friction data (Fig. 1C); identified approaches for repeatable control of kinematics and forces; quantified the impacts of testing conditions on the slip-tester's ability to predict slips; and quantified kinematics of slipping to guide future slip-tester designs. This preliminary development provided an important foundation for ensuring that the proposed Phase II development will be successful.

C.1.1. Slip-tester development

We developed a 3 degree of freedom slip-testing device along with an electronics system and software package to control it. For this device, shoe-floor angle and sliding speed are controlled with two linear motors that are oriented horizontally, while the vertical force is controlled with a linear motor that is oriented vertically (Fig. 1A). The developed software converts user inputs of shoe-floor angle and sliding speed into motion profiles of the two horizontal motors. The vertical force is controlled using the position of the vertical motor. A lower vertical position compresses the shoe sole and generates a larger normal force. We have demonstrated the reproducibility of this device based on two different shoes marketed as "slip-resistant shoes" on a wet ceramic floor surface. In this analysis, we calculated ACOF as the average shear to normal force for 200 ms after the peak normal force. Our device and control method was capable of generating ACOF values with a coefficient of variation of less than 1% and peak normal force values with a coefficient of variation of less than 5%. We also developed an electronics system that allows real-time control of the motors, records forces from the force plate, allows for the software to control motor settings and provides feedback regarding the motor status (Fig 1B). Lastly, the software system has several features that allows the user to control motor settings, control testing conditions, control file settings, monitor motor status and monitor forces (Fig. 1C). *The developed mechanical design knowledge, electronics configurations and software provide an important foundation upon which the Phase II research will be based.*

C.1.2. Identification of appropriate slip-testing conditions

We have performed analyses on human slipping data in order to better quantify the kinematics that occur during a slip. The 3D kinematics of 13 human slips were analyzed to determine the 3D shoe-floor angles and sliding speed during slipping. These kinematics were assessed at the moment of slip-start (the time point after heel contact where the shoe begins to accelerate). This study determined that the shoe-floor angle in the sagittal plane (~15°) was larger than those used in testing standards (7°) [61, 62], that the slipping speed was similar to testing standards (0.3 m/s) [61, 62]; that the shoe had an angle of approximately 0° in the frontal plane consistent with testing standards [61, 62]; and the median shoe velocity was oriented about 60° in the medial direction relative to anterior sliding contrary to testing standards which test at 0° relative to the anterior direction [61, 62]. *This information is critical since it suggests that biofidelic slip-testing standards should consider larger shoe angles and more medial angles than current tests.*

We have identified the impact of testing conditions on the predictive capabilities of ACOF values [63]. Specifically, ACOF data was collected across six-different footwear-floor-contaminant conditions: three designs of footwear with vinyl floor and 50% glycerol/50% water contaminant; two designs of footwear with vinyl floor and 90% glycerol/10% water contaminant; and one footwear design with vinyl floor and 75% glycerol/25% water contaminant. These test conditions correspond to the footwear-floor-contaminant conditions where human unexpected slipping data was available at the Human Movement and Balance Lab at University of Pittsburgh [64-66]. ACOF testing conditions included two different normal force levels (250 N and 400 N), two different sliding speeds (0.3 m/s and 0.5 m/s) and two different shoe angles (7° and 17°). In the human slipping data, subjects were unexpectedly exposed to a liquid contaminant during walking. The slipping outcome (slip or no slip) was determined based on whether the shoe heel exceeded 30 mm. Logistic regression curves were developed with ACOF as the independent variables and slip outcome as the dependent variable (Fig. 2A). After generating the logistic regression curve, the RMS error between the actual slipping rate and the predicted probability of a slip were calculated. In addition, ROC curves were used to determine the ACOF cutoff the led to the best balance between sensitivity and specificity (Fig. 2B). Specifically, the RMS error between the predicted slip rate and the actual slip rate was used to quantify the predictive quality of the test. Youden's J statistic was also quantified to determine the optimal balance between sensitivity and specificity. The testing condition with the lowest RMS error was a force of 250 N, a shoe angle of 17° and a sliding speed of 0.5 m/s (RMS error of 0.166; Youden's J of 0.46 at an ACOF cutoff of 0.08). This testing condition also achieved statistical significance for predicting slips ($p<0.001$). We believe that using a shoe angle of 17° offered a better ability to predict slips than 7° because this shoe angle better resembled the state of the shoe at slip-start (see

preceding paragraph). These results have provided foundational knowledge that informed a new whole-shoe testing standard that is currently in the review process ([redacted] see appendix). *In Phase II of this research, we aim to test more forces, sliding speeds, shoe angles and shoe conditions to identify the optimal testing conditions for predicting slips.*

C.2. Specific Aim 1: Identify a set of testing conditions (force, sliding speed and shoe-floor angle profiles) that best predict slip events.

Specific Aim 1 will identify an optimal set of testing conditions for predicting slip events, which will inform the design specs for the portable STEPS device. The testing conditions of the device will be systematically modified and each set of test conditions will be applied to nine shoe-floor-contaminant combinations. Logistic regression curves will then be developed for each set of testing conditions based on the measured ACOF values and slip outcomes from existing data. The set of testing conditions that best minimizes error between actual and predicted slip rates will be the basis for design of the portable device.

C.2.1. Rationale and Preliminary Data:

Using appropriate testing conditions is critical to achieving relevant and valid ACOF measurements. Previous research has determined that ACOF is dependent on the normal force [14, 15, 42], sliding speed [14, 15, 43, 44], shoe-floor angle [14, 15] and the time between heel contact and ACOF measurement [42]. Furthermore, tread orientation influences ACOF [16, 31] suggesting that sliding direction (i.e., in the anterior direction versus the medial direction) may also influence ACOF. Differences in testing methods lead to differences in the slipperiness ranking across different footwear or flooring designs. For example, previous research has demonstrated that just 2 out of 9 slip-testing devices were able to rank floor surfaces consistent with results of a human slipping study, whereas other devices (with different under-shoe conditions) ranked at least one of the floor surfaces incorrectly [48].

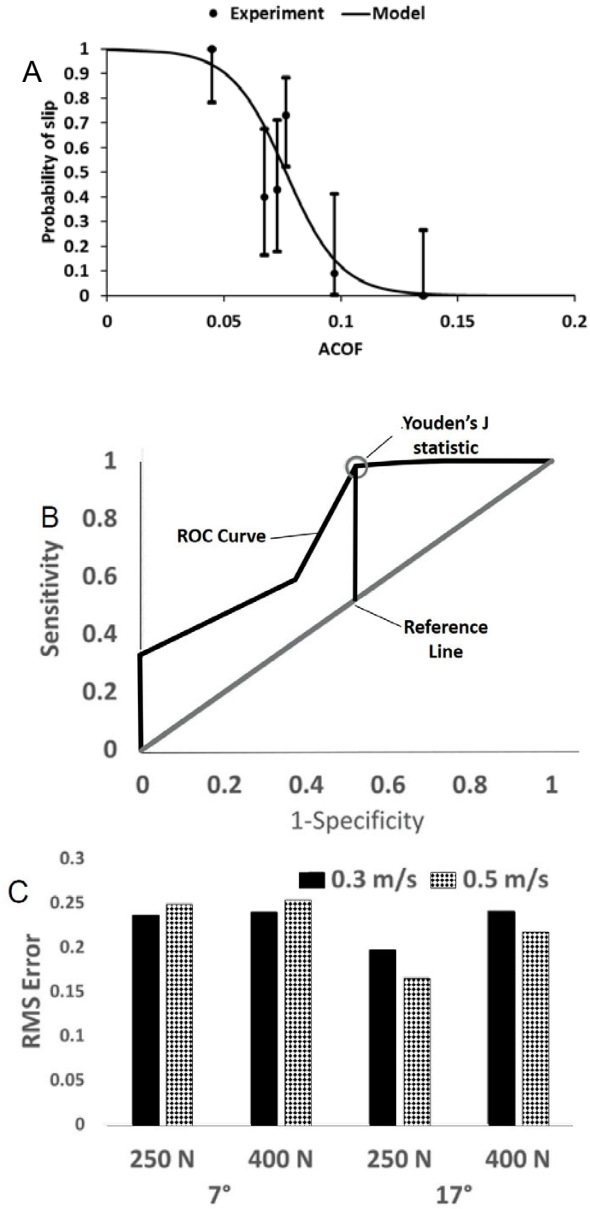

Figure. 2: A: Unexpected slipping rates from six different shoes (data points) and logistic regression curve fit (solid line) based on the ACOF measurements from the testing conditions that best predicted slips. Error bars represent 95% confidence interval. B: ROC curve (black) with a slope=1 reference line (gray). The gray circle marks the point where the Youden's J statistic (magnitude of vertical black line) is calculated. C: The RMS error calculated between the predicted and actual slip rates across the eight test conditions.

Utilizing testing conditions that mimic the under-shoe conditions during slipping is a common approach used to identify potentially relevant testing conditions. Our previous research (discussed in C.1.2.) revealed that at the moment of slip-start (i.e., the time when the ACOF was insufficient to continue decelerating the shoe), the average shoe-floor angle was 15°, the average sliding speed was 0.3 m/s, the median sliding direction was oriented 60° from forward slipping in the medial direction and the frontal-plane shoe-floor angle was 0°. This research suggested that current slip-testing standard methods utilized a sagittal-plan shoe-floor angle that was too low and a slip-testing direction that was too anterior. Other research has indicated that the normal force at the moment of slip-start is between 30 and 90% of bodyweight [67, 68], which translates to a normal force of between 260 and 675 N for an 75 kg adult [59]. This data provides a foundation regarding testing conditions that should be considered in order to achieve ACOF data relevant to slipping.

We have collected preliminary data that demonstrates the ability of our developed slip-tester to predict slip events (See Section C.1.2.). Thus, our preliminary data suggests that the range of testing conditions that is being considered in this study is sufficient for predicting slip events.

C.2.2. Experimental Procedures

Each of the shoe-floor-contaminant conditions that were used in the preliminary analysis and three additional shoe-floor-contaminant conditions where human slipping data is currently being collected (for a total of 9 different shoe-floor-contaminant conditions) will be utilized to determine the optimal testing conditions. The total number of subjects in this data set is 108 with between 11 and 26 subjects for each shoe-floor-contaminant condition (See Sections C.1.2, C.5.3 and C.5.4 for details regarding the experimental protocol and data analysis methods used in these studies). Each of these shoe-floor-contaminant conditions will be tested via a factorial design using the biofidelic slip-tester developed in Phase I under 128 different set of testing conditions. Specifically, four different normal force levels (250 N, 400 N, 500 N and 600 N), four different sliding speeds (0.1, 0.3, 0.5 and 0.7 m/s), four different shoe-floor angles (7°, 12°, 17°, and 22°), and two different sliding directions (anterior and 60° medial of anterior). Sliding speed and shoe-floor angles will be constant throughout shoe contact while force will be ramped up and then held constant during ACOF measurement. Five trials will be tested of each testing condition for a total of 630 trials.

C.2.3. Data Analysis

ACOF will be calculated using three different methods for each test. ACOF will be calculated by using a single time point consistent with current standards [61, 62]. Also, ACOF will be calculated using average ACOF data for 100 ms and 200 ms following the first time where the target force and sliding speed are reached consistent with previous research [19, 30]. Logistic regression equations and RMS error will be developed for these 384 different measurements methods (128 different set of testing conditions x 3 ACOF calculation methods). The testing method with the lowest RMS error will be identified. The optimal cutoff point for balancing sensitivity and specificity will be identified for the selected model as the point of the ROC curve corresponding to Youden's J statistic. Once the optimal testing conditions and the optimal cutoff point have been identified, Objective 1.1 will be considered complete. Note that while we will calculate and monitor p-values for each logistic regression curve, our experience is that even test conditions with a moderate ability to predict slips tends to be statistically significant (with a $p<0.001$). In fact, this was the case for all conditions shown in the preliminary data (Section C.1.2.).

C.3. Specific Aim 2: Develop a slip-tester that is portable, inexpensive and biofidelic.

This aim will focus on developing a portable, inexpensive and biofidelic slip-tester that will perform ACOF tests using the set of optimal conditions that were identified in Aim 1. Cost will be lowered (relative to the previously-developed slip-tester) by reducing components that have been over-designed, by removing functionality that is not needed to perform ACOF tests, and by substituting off-the-shelf aluminum components for existing components.

C.3.1. Rationale and Preliminary Design

In conjunction with preliminary market research, we used Quality Function Deployment design methods and House of Quality tools [69] to perform a trade-off analysis based on an assessment of customer needs, current competitive offerings, and critical performance parameters and values. The results of this analysis are reflected in Table 1. Based on the identified market opportunities, our design emphasizes portability and cost effectiveness, in addition to the initial focus on biofidelity.

A primary motivation for incorporating portability design objectives is to ensure that STEPS is capable of making measurements in real environments to improve the relevance of the results to actual walkways (i.e., measurements are environmentally fidelic). Environmental fidelity is a critical feature in shoe-floor ACOF testing in order to identify effective footwear or flooring interventions for a particular environment. Currently, ACOF of footwear is typically measured in laboratory environments [14-16, 42, 43, 59, 61, 62] against standardized flooring surfaces [61, 62]. However, complex interactions occur between shoe and floor surfaces [18, 29, 39] and an outsole with good ACOF on one type of flooring (used in a lab setting) may not be the most appropriate shoe on a different flooring in a real-world environment. Another current limitation is that ACOF test methods for shoes typically utilize large slip-testers in lab environments [14-16, 42, 43, 59, 61, 62] whereas floor ACOF test methods typically use portable devices in the field [33, 70, 71]. Given that two completely different device classifications are used to test ACOF of flooring and footwear, it is impossible to compare the relative effectiveness of footwear or flooring interventions. The last motivation for implementing portable slip-testing technology is to allow more precise estimates of expected risk reduction for a particular environment. Previous research has indicated that a reduction of 21% occurs for each 0.1 increment increase in floor ACOF [71]. Portable slip-testing technology would allow safety professionals to better assess the risk reductions across different footwear, flooring or combined footwear and flooring interventions in order to recommend

appropriate mitigation measures and estimate return on investment. Creating a business case for slip and fall prevention programs, particularly one that is customized to a business owner's specific conditions, is expected to overcome a significant barrier in encouraging slip-prevention interventions.

Our research team has to date developed five different slip-testers and a test method for measuring shoe-floor ACOF. These slip-testers include a slip-tester developed from a six degree of freedom (DOF) high payload robot [14], the Programmable Slip Resistance Tester II [72], a pin-on-disk tribometer [34, 37, 73], a two DOF slip-tester [19, 30, 74] and a three DOF slip-tester (Fig. 1). During the development and use of these various slip-testers, we have identified several design strategies that will inform the development of the portable STEPS slip-tester. We have determined that normal force tends to be a function of the vertical displacement of the shoe. Thus, vertical force can be controlled through vertical displacement and force loading rate can be controlled using the vertical velocity. Another key design feature is the strength of the horizontal motor, which must be strong enough to achieve the desired velocity profile, overcome friction within the slip-tester and overcome the shoe-floor friction at the shoe-floor interface. Thus, we have determined that the horizontal motor(s) should be able to produce shear forces approximately 100% of the desired normal force.

C.3.2. Design Approach

The proposed STEPS design will utilize kinematic linkage system concepts such that affordable off-the-shelf stepper motors can be used to achieve the needed forces and kinematics (Figure 3A). Specifically a toothed belt and pulley design will be used to convert rotary motion of the motor to linear motion of the slip-tester (Figure 3B). A slider-rocker system will be used to raise and lower the shoe in order to couple the loading and unloading of the shoe with the horizontal motion (Figures 3C and 4). Finally, the shoe height will be manually adjustable by turning an adjustment under the load cell, which will raise or lower the shoe in order to adjust the normal force. Thus, the proposed design will only require two moderate strength motors, which will allow STEPS to become more affordable and portable.

[redacted]

The proposed design will be capable of overcoming 400 N of shear force, applying up to 600 N of vertical force and moving at 0.5 m/s (depending on the results of Aim 1). A pulley with a diameter of 0.033 m will be used with a toothed belt to achieve a gear ratio of 30 (1/m) (Fig. 3C). This system will allow for the desired shear force using two synchronized stepper motors capable of generating 10 Nm of torque each at a speed of 14 rad/s (Potential motor: MST430C213-X1AA9.0, JVL, Birekerod, Denmark). The total shear force achieved by these two horizontal motors is 600 N (100% of normal force), which will be capable of overcoming 420N of friction force assuming an efficiency of 70% in the drive train system. The STEPS device will be powered using

either a power supply to connect with alternating current (80 V, 9 A Potential power supply: W80LT900 Acopian Technical Company, Easton, PA) or an 80 V battery system (Potential battery: GBA80200, GreenWorks, Ltd., Charlotte, NC). Water-fillable weights will be attached to either side of the device so that STEPS weighs enough to apply the required normal force without lifting off of the ground during testing. This design will allow for testing using [redacted] standard and ISO 13287 of shoe-floor surfaces for shoes with a ACOF of up to 0.84. Given that slips are exceedingly rare when ACOF values exceed 0.5 [25, 63], STEPS will

[redacted]

C.3.2.1. Sensors: A 6 DOF load cell will be specified and selected in order to achieve the desired forces. Such a sensor will be capable of measuring normal forces of at least 600 N, shear forces of at least 400 N as well as the moment generated by the shear force (approximately 100 Nm) and have a factor of safety of 2 before any damage to the sensor occurs. We will identify a sensor that best balances low weight and cost, while achieving the needed specifications.

C.3.2.2. Computer control and data acquisition: STEPS will utilize open-loop control to drive the motors via a low-cost open source microcontroller (Arduino). Because stepper motors are capable of achieving precise angular motion and do not accumulate error during rotation (within normal operating parameters), our device will not require feedback control. End switches will be placed to ensure that the device completed the motion without motor slipping. In the case that the device does not complete the motion, the user will be given feedback that the test was invalid. Furthermore, normal force will be adjusted during each testing setup by having the operator adjust the height of the shoe. The device will be lowered to increase shoe deformation (and subsequently force) or raised to decrease the force. Load cell data will provide feedback to the operator until the desired force is reached. We have determined that using vertical position control results in repeatable normal force levels [14, 30]. Through a connected LCD display, the system will guide the user through setup to set the desired normal force targets. During the data collection phase, the microcontroller will drive the motors to achieve the desired sliding speed while forces are measured from the load cell. During the data processing phase, the microcontroller will provide the ACOF value and advise the operator regarding height adjustments

needed to achieve the desired normal force. Additional status and control features may be made available via higher order Windows-based software communicating to the microcontroller over USB.

C.3.3. Mechanical validation

Mechanical validation will occur between the portable STEPS device using the 6 DOF load cell and the laboratory device developed in Phase I. ACOF data will be collected from both devices for 40 different shoe-floor conditions. Specifically, peak normal force and ACOF data will be compared across 10 different shoes, 2 contaminant conditions and two floor conditions. Five of the shoe designs will be slip-resistant and five of the shoes will be non-slip-resistant. Flooring will include ceramic vinyl tile and ceramic tile and fluid contaminants will be diluted sodium laurel sulfate (1% SLS, 99% water) and glycerol (90% glycerol, 10% water) in order to achieve a wide range of ACOF values. Friction and normal forces will be calculated by transforming (i.e., rotating) load cell forces to the orientation of the floor [14]. ACOF and normal force values will be averaged according to the optimal analysis method identified in Aim 1. The difference in ACOF and peak normal force between STEPS and the laboratory device (which will be considered the gold standard) will be reported as a measurement of the slip-tester's error. A Pearson correlation analysis will be conducted between ACOF recorded by STEPS and the laboratory device. Hypothesis 2.1 will be confirmed if the correlation coefficient is above 0.9 and if the 95% confidence interval for the slope determined by the correlation analysis includes the value of 1.

C.3.4. Assessment of Objective 2.1:

Objective 2.1 will be assessed once a final functional prototype is developed that achieves the requirements for the mechanical validation (Hypothesis 2.1). The final design will be weighed to confirm that it meets the objective of being less than 24 kg. Note that the mass of the water that is added for downward force during testing will not be included since it is anticipated that these weights will be drained during transportation. If Objective 2.1 is not accomplished, a list of material masses will be compiled and we will identify components that can be substituted with lower mass alternatives. High mass components are expected to be the motor and frame components. Also, a bill of materials will be created and the total cost of the device will be estimated. If the cost of the STEPS device and proposed software license fee exceeds the objective cost ($20,000), then high cost components will be targeted for substitution. After each subsequent redesign, mechanical validation will be repeated (Section C.3.3.) and Hypothesis 2.1 will be reevaluated. Once a design capable of accomplishing Hypothesis 2.1 is identified, Objective 2.1 will be considered accomplished.

C.4. Specific Aim 3: Quantify reproducibility and repeatability of the device using a round robin interlaboratory study design.

C.4.1. Rationale:

Interlaboratory tests are critical for assessing variability in device function and operator performances. Interlaboratory tests simulate the level of variability that is found when a device is used in practice by having individual operators at individual sites perform tests without knowledge of the expected results or the results at other test sites. Interlaboratory tests are commonly performed for [redacted] and [redacted] standards in order to establish repeatability of a device or method [75-77]. Furthermore, interlaboratory studies can be enhanced using a round robin design in order to quantify variability across different sources. For example, a round robin design could have multiple labs complete tests using multiple builds of the same device. Such an experimental design would allow for quantification of the three sources of variability: 1) variability across labs due to different operators and different ambient conditions; 2) variability across devices due to subtle differences in component manufacturing and assembly; and 3) repeatability of results within the same device. *We propose to use a round-robin design of five different "sites" (operator and lab) along with three different devices.*

C.4.2. Approach

We have recruited laboratories and operators from five different organizations including the two grantee organizations (which represent a consulting firm and an academic university); a safety footwear company ([redacted] see letter of support); a safety flooring institute/testing laboratory ([redacted] and a major health research organization [redacted]. Three slip-testers will be manufactured from the prototype STEPS design using the same materials and manufacturing process. Three different shoe-floor-contaminant combinations (treaded slip-resistant shoe against a vinyl floor and 90% glycerol; a different treaded slip-resistant shoe against vinyl floor with canola oil; and a slip-resistant shoe with worn off tread against a vinyl tile covered in 90% glycerol), which are known to have different slip outcomes, will be used. These shoe-floor contaminant conditions are known to have slip rates of 0%, 40% and 100%, respectively, based on human slipping experiments discussed in Aim 1 and thus

will have different ACOF values. The ACOF results of these shoe-floor-contaminant combinations are between 0.02 and 0.14, which will ensure that wear is low [78] throughout the study so that the shoes and floor surfaces do not substantively change.

The [redacted] approach for an interlaboratory study for dynamic ACOF will be extended to the STEPS device [76]. Deviations to the [redacted] approach will be that five operator/labs will be used instead of two in order to achieve a more precise estimate of reproducibility; that the standard will utilize the draft method of [redacted] (see Appendix) instead of [redacted] since only [redacted] specifies whole shoe testing; and that the same 3 shoe-floor specimens will be used for all operators and devices to eliminate variability across tiles or shoes. The interlaboratory study requires each operator to perform 60 individual measurements of the three different testing specimens [76]. After operators complete a testing set, they will upload the data to an analyst who will not participate in the interlaboratory testing. After completion of a set of testing, the STEPS device and shoe-floor samples will be mailed to another laboratory for testing until all five labs had performed tests with each of the three STEPS devices. At least one week will separate measurements across different devices using the same operator in order to make sure that the results of one measurement set do not influence the next measurement set.

C.4.3. Data Analysis

ACOF measurements across each operator, device and shoe-floor-contaminant combination will be used to quantify repeatability and reproducibility as well as determine bias across users or devices. In order to quantify repeatability, the standard deviation will be calculated across the 60 trials (S(X,Y,Z), Table 2) for each operator, device and shoe-floor contaminant combination. The mean squared error (i.e., square root of the average variance across different operators, devices and shoe-floor-contaminant conditions) will be calculated across operators, devices and shoe-floor contaminant combinations in order to quantify the repeatability (MSE_Repeatability, Eq. 1). The mean ACOF values across 60 trials from each operator, device and shoe-floor-contaminant condition will be used to quantify reproducibility (M(X,Y,Z), Table 2). Specifically, standard deviations of these mean ACOF values will be calculated across operators and devices (Eq. 2A). Then a mean square error will be calculated across the three shoe-floor-contaminant conditions (Eq. 2B). Lastly, a one-way ANOVA will be performed with each operator, device and shoe-floor-contaminant combination as an independent variable and the ACOF value as the dependent variable. The operator and device will be assumed to have not influenced the ACOF values and Hypothesis 3.1 will be confirmed if a p-value is greater than 0.1 for operator and device effects [76]. The p-value and Tukey HSD test will be performed on the shoe-floor-contaminant effect to make sure that the device correctly differentiated between these conditions ($p<0.05$) and ranked them in order of their associated slip rate.

Table 2: Analytic design

Oper-ator	Shoe A			Shoe B			Shoe C		
	Device 1	Device 2	Device 3	Device 1	Device 2	Device 3	Device 1	Device 2	Device 3
1	M(1,1,A)	M(1,2,A)	M(1,3,A)	M(1,1,B)	M(1,2,B)	M(1,3,B)	M(1,1,C)	M(1,2,C)	M(1,3,C)
	S(1,1,A)	S(1,2,A)	S(1,3,A)	S(1,1,B)	S(1,2,B)	S(1,3,B)	S(1,1,C)	S(1,2,C)	S(1,3,C)
2	M(2,1,A)	M(2,2,A)	M(2,3,A)	M(2,1,B)	M(2,2,B)	M(2,3,B)	M(2,1,C)	M(2,2,C)	M(2,3,C)
	S(2,1,A)	S(2,2,A)	S(2,3,A)	S(2,1,B)	S(2,2,B)	S(2,3,B)	S(2,1,C)	S(2,2,C)	S(2,3,C)
3	M(3,1,A)	M(3,2,A)	M(3,3,A)	M(3,1,B)	M(3,2,B)	M(3,3,B)	M(3,1,C)	M(3,2,C)	M(3,3,C)
	S(3,1,A)	S(3,2,A)	S(3,3,A)	S(3,1,B)	S(3,2,B)	S(3,3,B)	S(3,1,C)	S(3,2,C)	S(3,3,C)
4	M(4,1,A)	M(4,2,A)	M(4,3,A)	M(4,1,B)	M(4,2,B)	M(4,3,B)	M(4,1,C)	M(4,2,C)	M(4,3,C)
	S(4,1,A)	S(4,2,A)	S(4,3,A)	S(4,1,B)	S(4,2,B)	S(4,3,B)	S(4,1,C)	S(4,2,C)	S(4,3,C)

M(X,Y,Z) represents the mean across 60 ACOF trials for operator X, Device Y and Shoe Z.
S(X,Y,Z) represents the standard deviation across 60 ACOF trials for operator X, Device Y and Shoe Z.

$$\text{MSE_Repeatability} = \sqrt{\frac{\sum_{X=1}^{4}\sum_{Y=1}^{4}\sum_{Z=A}^{C} S(X,Y,Z)^2}{36}} \qquad \text{Eq. 1}$$

$$\text{Reproducibility}(Z) = \text{standard_deviation}(M(1,2,3,4 \quad 1,2,3 \quad Z) \qquad \text{Eq. 2A}$$

$$\text{MSE_Reproducibility} = \sqrt{\sum_{Z=A}^{C} \frac{\text{Reproducibility}(Z)^2}{3}} \qquad \text{Eq. 2B}$$

C.5. Specific Aim 4: Validate the ability of the portable testing device to predict slipping events.

C.5.1. Rationale and preliminary data:

We will perform human-based unexpected slipping experiments to confirm the ability of STEPS to prospectively predict slip events. Using unexpected slipping data is considered the gold standard in slip-tester validation [20, 25, 26]. Furthermore, the data from Aim 1 cannot be used for validation since this data was used to identify the test conditions and develop the slip-risk curves. Because this data was used to develop the logistic regression curves, which minimize error between the predicted slip rates and the actual slip rates, it is likely to underestimate the predictive error and overestimate the sensitivity and specificity. Prospective validation will prevent overfitting of the data and allow for accurate sensitivity and specificity estimates. Furthermore, our previous shoe-floor-contaminant friction data only considers a single floor surface, which prevents us from being able to assess the ability of the slip-tester to accurately assess the impact of flooring and the interactive effects between shoes and flooring and their impact on slip risk.

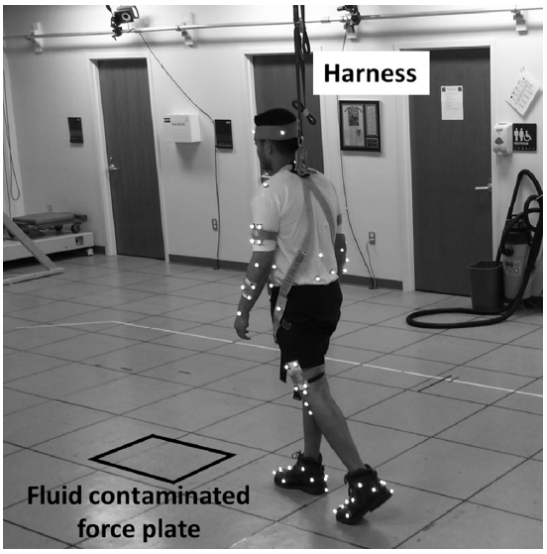

Fig. 5: Experimental setup for human subject testing [19]

C.5.2. Subjects:

Ninety subjects between the age of eighteen and sixty-five years old will be recruited to participate in the study. Subjects will be screened to ensure that they are free of effects from musculoskeletal, neural or other factors that impact gait. Female subjects of child bearing potential will be screened to ensure that they are not pregnant. The rationale for the number of subjects is provided in the power analysis (Section C.5.5.).

C.5.3. Procedure:

Subjects will participate in a single testing session where they will be randomly exposed to a shoe-floor-contaminant. The three shoes and two floor surface will have ACOF values ranging from 0.02 to 0.4 in order to achieve a variety of slip ranges. The shoe-floor surfaces will be selected based on preliminary data collected from the laboratory slip-tester in Aim 2. Once the portable STEPS slip-tester is ready, ACOF data will be collected using that device. The PI (Moyer) and the research engineer will complete the STEPS ACOF data collection/ analysis/post-processing. This data will be kept from the other PI (Beschorner), the post-doctoral scholar and the other students to ensure that the slip-tester results do not influence the human subject testing. One of the selected shoes will be marked as slip-resistant while the other two will not be labeled as slip-resistant. An unexpected slip-testing paradigm that has been used by both PI's [19, 64, 66, 79-81] will be implemented. Subjects will be randomly assigned to wear one of three shoe outsole designs and asked to walk on one of two floor surfaces. Subjects will be fitted with 79 markers and a safety harness. The marker of interest will be one placed at the inferior-most point of the heel. After a subject calibration trial and the subjects being allowed to walk repeatedly while donning the shoes, harness and markers; lights will be dimmed to minimize subjects' ability to see the condition of the floor. Subjects will walk at least six times across a pathway that is covered with the flooring assigned to the subject and a force plate embedded below the force plate. Subjects will perform a distraction task and listen to music between trials to minimize their awareness of the floor condition. After six trials where the subject successfully strike the force plate with their left and only their left foot, a contaminant (90% glycerol) will be placed on the floor without the subject's knowledge. Subjects will be asked after walking over the contaminated flooring 1) whether they saw the contaminant on the ground prior to stepping on it and 2) if they perceived a slip.

C.5.4. Data analysis

Slip outcomes will be determined from heel kinematics. The resultant heel distance will be calculated using a marker placed at the inferior-most point of the heel [19, 63]. The distance will be calculated between the time of the first local minimum in heel speed after heel contact to either the second local minimum or when the foot slips off of the contaminated force plate [19, 63]. A trial will be considered a slip if the slip distance exceeds 30 mm [19, 63, 82] and if the subject perceived that a slip occurred [20, 25]. If only one of these two criteria occur, the trial will be dismissed as ambiguous and not included in the analysis. In addition, step length and gait

speed will be observed for the step preceding the contaminated tile. Subjects whose gait speed or step length falls outside of the 95% confidence interval for the preceding six gait trials will be assumed to have anticipated the slip and will be eliminated from further analysis.

A logistic regression curve will be developed to determine if the ACOF values predicted slip rates and the sensitivity and specificity will be evaluated. Specifically, a logistic regression analysis will be performed with slip outcome (1 if the subject slips or 0 if the subject does not slip) as the dependent variable and the ACOF as the independent variable. Hypothesis 4.1 will be confirmed if the p-value for ACOF was less than 0.05. In addition, the previously developed logistic regression curve with the optimal sensitivity/specificity cutoff from Aim 1 (i.e., the point of the receiver operating curve corresponding to Youden's J statistic) will be used to predict the slip outcome. The sensitivity will be determined as true positive rate (i.e., proportion of trials where a slip was correctly predicted compared with total number of slips). The specificity will be determined as the true negative rate (i.e., proportion of trials where a no-slip was correctly predicted compared with total number of no slip trials). Confidence intervals (95%) will be calculated for sensitivity and specificity.

C.5.5. Power analysis:

The number of subjects used in this study is determined considering the required power for the logistic regression and the number of subjects required to get a precise statement of sensitivity and specificity. Logistic regression power analysis was performed using GPower (3.1) with the goal of achieving 95% power, using an α value of 0.05, and assuming that the mean slip rate will be 40% at the mean ACOF value and that the slip rate one standard deviation above the mean ACOF will be 20% (source data for this assumption from [83]). Under these assumptions, 76 slips are needed. Thus, collecting 90 subjects will allow for attenuation of up to 14 subjects due to subjects missing the slippery floor, ambiguous slip, or technical problems. Using 90 subjects will also lead to a sensitivity and specificity 95% confidence interval range of about 0.2.

C.6. Alternative Solutions

If the proposed STEPS design is unable to achieve the forces or speeds proposed, we may modify the design to use additional motors to augment either vertical motion or horizontal motion. Such a design would increase the weight and expense of the device. However, we believe such a device would still be significantly less expensive and more portable than the existing alternative [redacted]. Furthermore, we will pursue a dialogue with the [redacted] committee regarding the [redacted] standard. We will seek to identify opportunities for STEPS to be capable of performing to that standard. Lastly, the slip distance threshold used in Aim 4 may be modified in the case that subjects are clearly perceiving a slip at a lower threshold (say 20 mm). Furthermore, the requirement that subjects perceive a slip may be eliminated if subjects are not perceiving slips and it is clear from review of videos that a slip occurred.

C.7. Expected Outcomes

This research is expected to lead to an affordable, portable, slip-testing device that is based on significant shoe-floor ACOF and human-subjects slipping testing; has been rigorously validated for its ability to predict slips; and has well-defined repeatability and reproducibility. The findings from this Phase II research are also expected to influence testing standards under the jurisdiction of the [redacted] and [redacted] since one of the PI's (Beschorner) is a member of each of these committees. Thus, we expect that the standards will accommodate the resulting device's methods in order to achieve wide use of these methods. Thus, we expect that STEPS will be widely used and achieve a substantial impact in reducing slip and fall events.

C.8. Anticipated Timeline

The project can be completed in two years by collecting the unexpected slipping data in parallel with the device development (Table 3).

Table 3: Expected timeline for the study

Development Activity	Year 1				Year 2			
	Q1	Q2	Q3	Q4	Q1	Q2	Q3	Q4
Aim 1								
Collect ACOF data								
Perform analyses								
Aim 2								
Slip-tester development								
Software development								
Aim 3								
Interlaboratory Study								
Aim 4								
Unexpected slip collection								
Data analysis								

Inclusion of Women and Minorities

This research includes women and minorities. In the Human Movement and Balance Lab, half of the primary faculty are women and the breakdown of students and staff working in the lab is approximately 50% men and 50% women. We will continue our active recruitment of underrepresented students through academic advising of students in the department of Bioengineering and through the University of Pittsburgh student organizations including the Society of Women Engineers (SWE) and the National Society of Black Engineering (NSBE).

Study participants will be recruited according to the Pittsburgh demographic distribution (50% women and 50% men; 67% white, 27% African American, and 3% Asian; 1.3% Hispanic). Subjects will be recruited from the general community through flyers posted throughout the Pittsburgh area and through collaboration with Nabors Industries. Women will be actively recruited through organizations such as the Women's Resource Center (YWCA). Minorities will be actively recruited through the Pittsburgh Metropolitan Area Hispanic Chamber of Commerce, African American Chamber of Commerce for Western Pennsylvania, Urban League of Pittsburgh and Urban League of Young Professionals of Pittsburgh.

The results of the proposed research will be disseminated to the public via the Human Movement and Balance Laboratory website, university courses, journal publications, conference presentations, seminars, and the education/training programs which will also be offered online to broaden participation. Journal articles will also be made readily available on the Centers' website.

Inclusion of Children

We do not anticipate children participating in this study. We believe that a separate study for children is warranted given that children's bodies are growing and that the gait patterns of children are transient as a result. In the state of Pennsylvania, the legal age of majority is 18 years. This procedure is consistent with requirements from the University of Pittsburgh Institutional Review Board.

Protection of Human Subjects

1.0 Risks to Human Subjects

A. Human Subjects Involvement, Characteristics and Design

Human subject data will be utilized to develop slip-testing testing condition specs (Aim 1) and to validate the ability of the developed slip-testing device to predict human slips (Aim 4). Data used for Aim 1 will be already collected and de-identified data from 108 subjects. To validate the ability of the developed device to predict slipping risk (Aim 4), we will recruit 90 subjects. All subjects will be between the ages of 18 and 65 years, will be generally healthy, and will not be recruited from vulnerable populations. The age range was chosen to reflect the healthy, non-elderly adult population.

Subjects will be screened through a verbal questionnaire to ensure that the subjects do not have any serious musculoskeletal or neurological deficiencies that would impact their gait (see 4.1.2. Adequacy of Protection against Risk for more details on exclusion criteria) and to ensure that they meet the inclusion criteria. This screening process is similar to other Internal Review Board-approved protocols conducted in the Human Movement and Balance Lab [20, 64, 66, 84, 85].

Recruitment will be performed around the Pittsburgh area with fliers and word of mouth. Subjects will be compensated [redacted]. This compensation is appropriate since the testing protocol is expected to take approximately 2 hours.

Subjects will be randomly assigned to wear different shoes and walk on different surfaces during the testing protocol. No other collaborating sites will be involved in human subjects.

B. Source of Materials

Biomechanics and basic personal data will be collected for each subject. The biomechanical data will include ground reaction forces and motion data. The personal data will include height, weight, age, sex, and certain body measurements. Data will be captured and stored on a laboratory computer in the Human Movement and Balance Laboratory at University of Pittsburgh. All data will be de-identified and each subject will be assigned a randomly generated subject ID. The records linking personal information to the subject ID will be kept in locked filing cabinets that are only available to the research team directly involved in this study. All computers that are used to collect data will require a password to access the data, which only be available to faculty and students of the Human Movement and Balance Lab. No specimens will be collected from subjects.

C. Potential Risks

Subjects will only be exposed to minor risks. Protection of the subject will focus on minimizing the risks of hitting the floor after a slip. To protect against hitting the floor, a harness system will arrest a fall in the case the subjects lose their balance. Therefore, we anticipate the risk of hitting the ground to be minimal (<1%). Other potential yet minimal risks include overexertion during the recovery period of the fall (<1%) and foot blistering will be minimal (<1%).

2.0 Adequacy of Protection Against Risk

A. Recruitment and Informed Consent

Subjects will be recruited from the Pittsburgh community because of the availability of healthy people in this community. Flyers and word of mouth will be used to recruit subjects. Potential subjects will be consented in private prior to the testing session. Subjects will be mailed the informed consent forms ahead of time upon request to ensure that they have adequate time to read it. In addition, the consent will be verbally explained to them and they will be encouraged to ask questions about the protocol and potential risks. The informed consent will take place by a member of the research staff.

B. Protections Against Risk

A harness system will be used to minimize risk of injury to the subjects during testing at the Human Movement and Balance Lab. Subjects will be screened with a verbal questionnaire and exclusion criteria will be applied to ensure that at-risk groups will not be included in the study. The exclusion criteria are: obesity (BMI >30), a musculoskeletal history such as a broken bone or pulled muscle in the previous 2 years, any reconstructive surgery, arthritis, osteoporosis, or any other musculoskeletal disorders that might increase their injury risk or impede their ability to recover from a slip. Subjects will be screened to exclude subjects with neurological disorders. Subjects without vision-corrected 20/20 will be excluded. Female subjects will be screened and excluded if they are pregnant. We expect that risk to confidentiality will be minimal by de-

identifying data and by restricting access to identifiers to only the PI's of the study. No vulnerable populations will be included in this study. All of these procedures have been reviewed and approved in previous protocols approved by the University of Pittsburgh Internal Review Board [20, 64, 66, 84, 85].

3.0 Potential Benefits of the Proposed Research to Human Subjects and Other

No benefits are known from participation in the study. However, the knowledge gained from the study is expected to benefit other persons by providing a device that will better guide slip-prevention interventions. Given that the participants will be exposed to minimal risk, we anticipate the benefits to others to justify the risk of the study participants.

4.0 Importance of the Knowledge to be Gained

Slip and fall accidents account for a large portion of occupational injuries and often result in severe injuries. Currently, a need exists for technology that can measure shoe-floor friction in the field. The proposed research will fill this gap. Given the minimal risk and potential benefit provided to the subjects, the knowledge gained is expected to greatly exceed the risk to participants.

5.0 Data and Safety Monitoring Plan

No data and safety monitoring plan is required since the proposed research does not involve a clinical trial.

6. ClinicalTrials.gov Requirements

No clinical trial will be conducted so no registration is needed in ClinicalTrials.gov.

Crossroads Consulting, LLC STEPS Commercialization Plan

A. Executive Summary - Value of SBIR Project, Expected Outcomes, and Impact

Proposed Project and Key Technology Objectives

The Shoe Tribometer for Enhancing Predictive Safety (STEPS) technology to be advanced in this Phase II SBIR project is a cost-effective, portable slip-testing device for measuring shoe-floor coefficient of friction with increased biofidelity. Designed to meet a pending new [redacted] standard for testing shoe-flooring-contaminant combinations, STEPS will improve slip-testing technology by measuring shoe-floor friction using optimized testing parameters to better predict human slip conditions. Delivering this capability in a compact device suitable for both lab and field will enable researchers, safety consultants, shoe and flooring manufacturers, and incident forensic teams to rapidly, affordably, and accurately measure and document coefficient of friction and more effectively guide ergonomic interventions to mitigate slip and fall incidents.

Phase II SBIR research will focus on four specific aims: 1) identifying the optimal testing conditions for predicting slips retrospectively; 2) improving the portability and reducing the cost to manufacture this device; 3) verifying the reproducibility and repeatability of the device; and 4) quantifying the ability of this slip-tester to reliably predict slipping accidents. The proposed STEPS design will optimize portability, biofidelity, and cost by applying kinematic linkage system concepts, maximizing the use of off-the-shelf hardware components, using an open source microcontroller, and providing a simple user interface to guide system set up and operation. Additional status (real-time data stream, data logging, and graphical presentation), set up, and control features will be made available via higher order software communicating to the microcontroller over USB.

In Phase III, the STEPS design will be made available via an open hardware license (OHL). Potential clients will have the option of building their own device to specification, purchasing a complete build kit from Crossroads Consulting, LLC ("Crossroads"), or purchasing a turnkey system. However, the primary business interests for Crossroads is licensing the STEPS software (included in bundled hardware/software and turnkey systems) as well as providing support services for STEPS calibration, training, maintenance, and troubleshooting. Additional business opportunities, such as equipment leasing and slip-testing services, will also be considered. Building on STEPS, on-going research and development will drive further innovation resulting in next generation devices and long-term revenues.

Addressed Need and Limitations of Current Methods

Slip and fall accidents are one of the most common causes of occupational hazards affecting workers in the US. Reduced available coefficient of friction (ACOF) is a critical contributing factor to slipping accidents and quantification of this attribute is key to identifying and preventing slippery surfaces. However, ACOF is a complex phenomenon that is dependent on several testing methodology factors including the vertical loading, the sliding speed, the contact angle between the shoe heel and the floor, shoe and floor materials, size and shape of tread, and floor texturing. Because of the dependence of measured ACOF on testing parameters, slip-testing methods and associated testing devices should exhibit biomechanical and environmental validity by ensuring that loading conditions are relevant to human slips and that the shoe and floor specimens are realistic. Unfortunately, current guidelines are not based on the latest science and commercially available portable testing devices do not meet the recommendations for preferred loading conditions. As a result, most slip-testers provide an ACOR value that is an approximation of the tribological interaction that occurs during a slip or step. Furthermore, although slip-testing devices should be easy to use and provide reliable and reproducible friction values, certain existing devices fall short of this expectation.

In the US, there are currently no mandatory standards or friction requirements that must be met in order to classify a sole as “slip resistant,” only general guidelines. Many slip-resistant shoe manufacturers use a [redacted] tester (Figure 1) to measure their products using the [redacted], Standard Test Method for Measuring the Coefficient of Friction for Evaluation of Slip Performance of Footwear and Test Surfaces/Flooring Using a Whole Shoe Tester, or ISO 13287-2012, Personal Protective Equipment-Footwear-Test Method for Slip Resistance, if they sell shoes in Europe. Others use a [redacted] or [redacted] in which ACOF is determined by the maximum collision angle whereby the shoe material sticks to the floor and does not slip.

[redacted]

[redacted]

To improve the biofidelity of specified test methods and enable predictive analytics for human unexpected slip rates, the [redacted], Safety Requirements for Slip, Trip, and Fall Prevention, is developing [redacted] Standard Test Method for Lab Measurement of Footwear Outsole Material Slip Resistance (currently in review). This proposed standard is based on state-of-the art science and review of recent biomechanical studies to determine realistic testing parameters to mimic under-shoe conditions that occur during either typical walking or an unexpected slip. The standard also sets forth a classification system for categorizing the slip-resistance of footwear when interacting with a specific flooring and fluid contaminant.

Improved biofidelity is one of several critical design factors. Preliminary market research conducted by the [redacted] identified additional market-driven criteria. Using Quality Function Deployment (QFD) methods and House of Quality tools, we performed a trade-off analysis based on an assessment of customer needs, current competitive offerings, and critical performance parameters and values. Based on the identified market opportunities, there is an urgent need for a modern slip-testing device that 1) is relevant to the current understanding of the biomechanics and tribology of slipping, as reflected in the pending [redacted] standard; 2) can provide feedback for reducing slipping accidents; 3) is easy to use, reliable and reproducible; 4) is portable to enable improved environmental fidelity; and 5) is affordable.

Commercial Application and Innovation

STEPS is anticipated to be the first device to be approved under the new [redacted] standard. The primary innovation enabling this is STEPS' use of predictive slip-testing conditions based on biomechanical analysis of human slipping data. This approach represents an innovative improvement above existing technology which, at best, uses peak or average values measured from human gait for forces, angles, and/or testing speeds or, at worst, uses forces, contact angles, and testing speeds that have limited or no relationship to physiologically produced values.

In addition, unlike other whole shoe devices which are a) not portable and b) use separate motors to drive vertical and horizontal motion, STEPS implements a unique kinematic linkage system to couple vertical and horizontal motion. As a result, STEPS will be lighter (<24 kg), more cost effective to manufacture (target cost [redacted]), and accessible to a broader market.

Societal & Scientific Impact

Slips and falls continue to be among the leading generators of work-related injuries and workers' compensation claims, and represent the primary cause of lost days from work. Slip, trip and fall events account for approximately 27% of non-fatal injuries and 17% of fatal injuries in the workplace and are the leading cause of occupational injury for people aged 55 years and older (US Bureau of Labor Statistics 2014). Statistics reveal that 29% of worker's compensation claims are attributed to slips and falls (2016 Liberty Mutual Workplace Safety Index). Slip, trip and fall events are particularly frequent in service industries (i.e., healthcare, retail, food service, transportation), construction, and manufacturing. More than 32% of workers that sustain slip/fall injuries miss 31 days at work or more (US Bureau of Labor Statistics 2014). Falls are often listed as the cause of the most disabling conditions (e.g., fractures and multiple injuries), primarily affecting the trunk (mostly back) and lower extremities. The severity of fall-related injuries is partly responsible for their high compensation and medical costs – approximately [redacted] per claim – second only to the cost of motor vehicle accidents (National Safety Council Injury Facts 2015 edition).

By providing a robust mechanism to more accurately predict and prevent conditions leading to slips and falls, STEPS could have a profound impact on worker safety and health, especially in high risk industries where anti-slip flooring and footwear might be prescribed with greater scientific understanding. Even a 10% improvement nationally would save 80 lives, prevent more than 31,600 injuries, and save [redacted] in workers compensation and medical costs annually. Given the portable and affordable nature of STEPS, the potential for increased on-site assessments may also drive scientific breakthroughs based on increased fidelity of environmental conditions that lead to slips and new technology innovations derived as a result of preventing or mitigating these risks.

Alignment with Business Objectives

Crossroads is dedicated to the practical application of scientific research to human movement characterization and injury prevention. This aligns with our objective to provide a more biofidelic slip-tester that is portable (i.e., useable at work sites) and affordable to more companies. Through wide-spread technology adoption, we want to increase testing consistency and data reliability to enable more meaningful comparisons of shoes, flooring, and anti-slip products. In year two of the project, Crossroads and the University of Pittsburgh will engage with potential end users in academia, industry, and government in order to create a base of early adopters. In addition, we will work with the [redacted] to conduct independent testing and evaluation to gain device approval once the [redacted] standard is finalized. In the first non-SBIR funded year, Crossroads will ramp up sales and marketing efforts, conduct demonstrations and targeted exhibitions, and begin selling complete build kits and software licenses. It is anticipated that early sales will be primarily in the safety and ergonomic research and consulting sectors, with market penetration expanding to the industrial sector as shoe and flooring manufacturers adopt the new test standard. Crossroads will also offer extended maintenance and service contracts, hardware/software upgrade kits, and potentially, equipment leasing and testing services for sustainable revenue streams.

B. Company

Origins

Upon earning his Ph.D.in Bioengineering at the University of Pittsburgh, Dr. Brian Moyer (PI) established Crossroads Consulting, LLC in 2006 to provide custom software and hardware solutions that improve human performance and health and safety. Core competencies include LabVIEW programming, electro-mechanical prototype design and fabrication, full body human motion modeling and dynamic analysis, and biomechanics data acquisition and signal processing. Annual revenues average [redacted] and staffing needs have historically been augmented through the use of independent consultants.

As a small business owner, engineer, and educator, Dr. Moyer is committed to applied research and development and the deployment of technologies for injury prevention. As a business leader, Dr. Moyer is actively involved in numerous regional entrepreneurial initiatives focused on the maker movement and promoting product-based commercial ventures. Many strategic contacts and relationships have been and will continue to be established through this participation. Dr. Moyer's background in gait biomechanics and slip and fall prevention, extensive experience in device prototyping, automation, and computer programming, and entrepreneurial outlook ensures that Crossroads has the technical capability necessary to perform this project and the commitment to make STEPS a viable commercial offering.

Successful Track Record

Crossroads has a track record of successful technical innovation and contributions to product development spanning diverse market sectors, including medical, manufacturing/production, and

sports and entertainment. In support of numerous biomedical/medical device and clinical applications, Crossroads has developed software, graphical user interfaces, and algorithms for systems used to assess cardiovascular health, evaluate and diagnose pulmonary health, deliver chiropractic diagnosis and treatment, and provide vestibular clinical diagnoses. Many of these efforts involved advanced techniques for data acquisition, signal processing, and process control using electroencephalogram (EEG), eye motion tracking, human motion capture, or other physiological signals. Crossroads also established a private motion capture laboratory to support regional animation, performance evaluation, and entertainment projects. This was used to develop a motion capture-based system for golf swing analysis, enhance rider performance through optimized bike-rider fit, and track human actors in support of the development of a college lacrosse video game. Representative custom software development examples for industrial applications include assembly line monitoring and data analysis for disposable thermocouple manufacturing, remote data logging and mobile communications for oil and gas well monitoring, and process automation for nanotechnology manufacturing.

Direct federal funding is limited to the Phase I SBIR project performed from 2012 to 2015. Historically, the majority of Crossroads' client base has been affiliated with the University of Pittsburgh, including various research laboratories within the Swanson School of Engineering as well as the Medical Center. In addition, Crossroads has numerous private sector clients, primarily in the mid-Atlantic region.

Future Vision

As Crossroads evolves from a specialized technology research and consulting company to developing STEPS as a commercial product offering, new management and technical staff will support long-term sustainability. Ms. Heather Moyer joined Crossroads Consulting, LLC in September 2016 as co-owner and Managing Director, assuming full responsibility for day-to-day business operations and giving Crossroads a supply chain advantages as a small woman-owned business. Ms. Moyer is a Chemical Engineering graduate of Carnegie Mellon University with more than two decades of experience managing federal government projects and programs and corporate technology development initiatives. Dr. Moyer maintains a high degree of involvement in Crossroads as the Technical Director and co-owner.

Crossroads will hire a full-time junior engineer to support Phase II development efforts and on-going commercialization objectives. Crossroads also anticipates hiring a full-time sales manager to support marketing, coordinate scheduling and delivery, and manage client relationships as product and service demands increase.

C. Market, Customer, and Competition

Market Overview and Customer Profile

Targeted clients include safety and ergonomic research labs, occupational and forensic consultants, and manufacturers of anti-slip footwear, flooring, and coating products. Figure 3 shows the relative distribution of market potential based on the following initial market research and client profile assumptions.

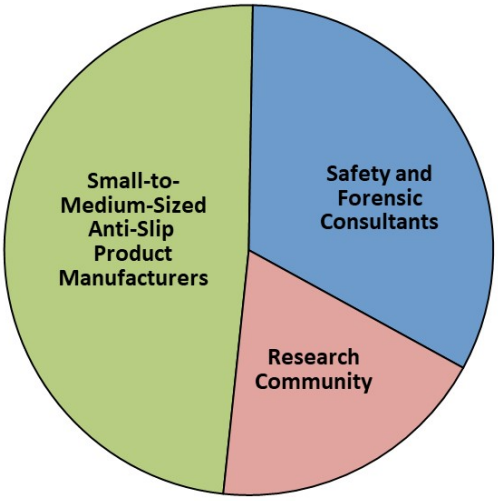

Figure 3. Relative market potential

Research and development (R&D) laboratories focused on biomechanics, ergonomics, and workforce safety and health are anticipated to be early adopters. More than 60 academic, government, and industry research institutions were identified through the [redacted], a research forum promoting interactive discussion on scientific matters related to slips, trips, and falls accidents. Approximately 100 safety and forensic consulting firms were also identified. It is anticipated that the R&D and consulting community will be greatly interested in the biofidelity improvements offered by the STEPS slip-tester as well as the predictive nature of the results for establishing ergonomic guidelines. The portability of STEPS will also be attractive to those conducting on-site assessments and field studies.

With a work/occupational/safety footwear market greater than [redacted] (NPD Group 2014) and the US hard surface flooring market forecasted to reach [redacted] by 2019 (Freedonia 2015), footwear and flooring manufacturers as well as other niche anti-slip product manufacturers are also a target market. Manufacturers use slip-testers to validate product designs and formulations as well as to provide standards-based test data to market their products. Many smaller manufacturers who cannot afford to invest in current commercially available slip-testing devices, will find STEPS affordable. Given the demand in high-risk industrial (construction and manufacturing) and service (healthcare, food service, retail) sectors, footwear manufacturers are focused on the development of low-cost, comfortable, lightweight, durable, and slip-resistant safety shoes. In a review of more than 150 footwear manufacturers listed in the Thomas Register (ThomasNet.com), approximately half are focused on safety footwear and/or work boots and shoes in North America. Of these, approximately 60% are smaller manufacturers with less than 100 employees – a target market for a lower cost slip-testing device. In addition to shoe manufacturers, there are more than 180 anti-slip flooring manufacturers and anti-slip coating/treatment suppliers in North America (ThomasNet.com). Many of these are also small manufacturers who might find STEPS attractive from a cost and portability standpoint.

Our preliminary market research shows that the addressable market (North America) for STEPS is in the $Millions, providing Crossroads with ample business opportunity given even modest market penetration (Table 1).

Table 1: Estimated Addressable Market (North America) for STEPS

[redacted]

Technology Discriminators and Strategic Advantages

As a fundamentally new slip-testing technology, STEPS offers the following unique capabilities and attributes:

- Portable: target weight is less than 24 kg
- Affordable: target cost is less than [redacted]
- Improved Biofidelity: use of predictive slip-testing conditions based on biomechanical analysis of human slipping data better represents the tribological phenomenon at the shoe-floor interface
- Reliable and Repeatable: as validated through an interlaboratory study using four different operators; three different devices; and four different locations
- Predictive: as validated through a laboratory study to quantify the sensitivity and specificity of the portable device to predict slips

As a small woman-owned business, Crossroads will market to and partner with organizations having socioeconomic and diversity procurement objectives, such as government and academic research institutions and consultants executing government-funded projects. In addition to these technical and economic advantages, key strategic relationships include [redacted]. Both will help to enable STEPS to be the first qualified device under the new [redacted] standard.

Competition and Market Challenges

A major limitation in competing slip-testing technology is that the devices do not replicate under-shoe conditions experienced during slipping. Currently, the most common portable slip-testing devices are the [redacted] and the [redacted], and very recently, the [redacted] device was introduced. These devices allow for a collision between a shoe material and the floor at varying angles and the ACOF is determined by the maximum collision angle whereby the shoe material sticks to the floor and does not slip. The primary difference between these devices is the [redacted] is pneumatically driven and the [redacted] devices are gravity driven. Two other devices, the [redacted] and [redacted], provide ACOF measurements at the push of a button. All of these devices are available for less than [redacted] However, none of these portable devices have attempted to reproduce the under-shoe conditions (sliding speeds, normal force, and shoe-floor angles) of slipping during testing. Therefore, Crossroads will market STEPS as an alternative portable and cost effective slip-tester that better simulates shoe-floor tribology and enables predictive analytics to guide product design and ergonomic mitigation strategies.

Another device, the [redacted] could be a competitor for portable whole-shoe testing. However, this device is not commercially available, contains several parts that are difficult to manufacture, requires the user to develop software to operate its linear motors and still has unnecessary weight and cost due to the fact that four linear electromagnetic motors are utilized in the design.

Primary competition from non-portable systems comes from [redacted] an independent research and testing organization established in the United Kingdom in 1919 with multiple facilities in Europe and China. As the well-established industry leader in Europe, [redacted] worked with the European Committee for Standardisation (CEN) and the International Standards Organisation (ISO) to develop a test standard specifically for slip resistance testing of safety footwear. The [redacted] device formed the basis of the safety footwear test, EN ISO 13287, and more recently, the US standard [redacted]. The modern [redacted] slip-test device can run a number of different test methods. Though it is a whole shoe tester, [redacted] devices are not portable due to their size and weight, and is not affordable to many potential end users. As a result, Crossroads will be targeting North American research, consulting, and small product manufacturing market sectors, expanding the use of slip-testers in new markets due to STEPS improved biofidelity, portability, and predictive analytics at a significantly reduced cost.

Based on a QFD/House of Quality analysis, desired attributes for a new slip-tester are summarized in Table 2, with comparative assessments provided for leading competitors and the proposed portable slip-tester, STEPS.

Table 2. Features and comparison of slip-testing devices

[redacted]

**Mass information not available for* [redacted]

While Crossroads is optimistic that STEPS will be a unique offering and thus, very competitive and attractive to clients, several market challenges remain. The existence of multiple slip-testing standards introduces confusion that may require significant client education to ensure that they understand the new [redacted] standard, how it pertains to their needs, and the benefits STEPS provides as an approved device. In some cases, we will need to present a viable business case for why owners of competing slip-testers should now purchase a STEPS device. For those without current slip-testing capability, we will need to make a strong business case for why now? and why STEPS? Should for some reason STEPS not meet the new [redacted] standard, we will pursue opportunities under the F2913 standard. In all cases, technical branding of both Crossroads Consulting, LLC and STEPS will be critical to gain name recognition and increase buyer confidence. Fortunately, the research team's relationships and professional network, decades of relevant scientific work and publications, and renowned slips and falls expertise will help us to earn the trust and respect of potential clients and end users.

Marketing and Sales Strategy

STEPS will be marketed as a low-cost, open source hardware design with available licensed software interface and controls. It will be showcased as the first approved device meeting the [redacted] standard. In particular, it will be marketed to researchers looking to improve their

measurement integrity and predictive capability and to small-to-medium sized manufacturers and consultants who do not currently have their own testing capability.

Marketing collateral will be developed to include a one-page product summary and capability handout, a website featuring product information, videos, and ordering information, and a pop-up banner stand for trade shows and conferences. An initial sales campaign will be conducted through direct outreach to the stakeholders participating in the [redacted] standards meetings and other professional contacts. Additional clients will be reached through Crossroads' participation in relevant industry trade shows and conferences. In addition to Crossroads, representative footwear ([redacted]), flooring ([redacted]), and research ([redacted]) stakeholders will support technical branding through social media, publications, and presentations.

D. Intellectual Property (IP) Protection

The STEPS hardware design will be made available via a TAPR or CERN Open Hardware License, a Creative Commons Attribution-NonCommercial-ShareAlike (CC BY-NC-SA) license, or other similar framework. Each of these licenses provide the right to use, adapt and redistribute the underlying design documentation and products with attribution, with the same rule applied on derived works. They vary in their restriction of commercial use and author notification. As OHL options are still evolving, the PIs will revisit this subject to determine the most appropriate open source licensing option at the time of hardware design release.

The accompanying software that provides a turn-key user interface, system controls, and data acquisition for STEPS will be copyrighted by Crossroads Consulting, LLC and available as a compiled executable file via a licensing agreement. Initially, all OHL and licensed software downloads will be managed through the Crossroads website, but as market interest grows, use of an online open source repository like Thingiverse or Github may be considered to manage the OHL. Licensing options for unique functional software modules developed by others will be considered for those who wish to collaborate with Crossroads.

Significant economic barriers to entry will exist for competing derivatives of the hardware design or software, including the cost of development, cost of performing an interlaboratory study, and cost of performing validation testing to meet the [redacted] standard.

E. Finance Plan

Crossroads does not anticipate a significant need for financing given the open source hardware model, service emphasis, and anticipated order volumes for STEPS build kits and turnkey systems. Crossroads does not expect to carry significant hardware and materials inventory; lead time for commercially available STEPS components is anticipated to be less than a week and for custom components, less than two weeks. Thus, complete build kits will be available within three weeks of placing an order. For those customers opting to purchase both assembled hardware and system software from Crossroads, each STEPS device will be built upon receipt of order, anticipating customer delivery within three-to-four weeks.

Crossroads currently has a [redacted] line of credit through a local lending institution that could be increased, as necessary, given a sizable order backlog for build kits or turnkey systems. In addition, we may pursue financial support through the [redacted] who invests in marketable innovations developed in our region. Through proactive engagement in regional entrepreneurial activities and events, Crossroads has well-

established relationships with [redacted] and their partnering organizations that would increase the likelihood of their support.

F. Production and Marketing Plan

Production

STEPS will be purposely designed to integrate commercial-off-the-shelf components to the degree possible, limiting the number of custom components to be produced. This will enable those who choose to build their own device using the open source hardware design to do so with ease, and also streamlines Crossroads' delivery of STEPS devices for clients choosing to purchase a complete build kit or turnkey system. Crossroads will work with suppliers to cost-effectively procure off-the-shelf motors, belts, power supplies, shoe lasts, load cells, T-slot rails, etc. (reference the primary system components shown in Figure 4). Leveraging the significant manufacturing capability in Western Pennsylvania, Crossroads expects to contract with regional suppliers for raw materials and fabrication necessary to produce any custom components for the frame, moving chassis, and slider rocker. Crossroads will package these components into complete build kits or assemble devices for clients as a service with little to no direct manufacturing required.

[redacted]

Marketing Plan

Phase II SBIR (years 1 and 2): Leveraging the initial market assessment conducted by [redacted], Crossroads will continue to gather market intelligence from the research community, shoe and flooring manufacturers, and safety and health consultants. This will be done through publicly-available information from the [redacted], as well as informal inquiries to product vendors, safety professionals, and researchers about their needs and frustrations with existing slip-tester devices and methods. In addition to gathering requirements to inform and improve product design, Crossroads will also use these professional interactions to generate excitement about STEPS as a potential near-term solution and endeavor to create a base of "early adopters" who will help generate data for marketing collateral purposes.

Phase III (years 3 and beyond): Crossroads will actively market STEPS through various demonstrations and exhibitions to showcase the portability, ease-of-use, and functional features of STEPS. When release of the OHL and software license is imminent, we anticipate setting up demonstrations and workshops at the interlaboratory test sites (PA, NC, and ON) and [redacted] (TX), with additional workshops planned in other targeted regions where there are multiple potential customers and/or highly attended industry events. Potential future exhibits will be planned at various trade shows targeting high risk service industries (e.g., the National Restaurant Association Show, the Association of Occupational Health Professionals in Healthcare National Conference, etc.), and various forums sponsored by safety and occupational health associations (e.g., International Ergonomics Association, Human Factors and Ergonomics Society, etc.). Crossroads also will publish and advertise in relevant trade journals to better reach targeted market sectors.

Crossroads will grow its web presence and e-commerce to support hardware and software licensing downloads, complete build kits and hardware/software upgrade purchases, and access to other STEPS services. The Crossroads website will also feature product literature, training materials, and informative webinars, and videos and testimonials showcasing the success of early adopters.

G. Revenue Stream

STEPS Revenue

Revenue from the STEPS slip-tester is anticipated to be generated through direct sales of complete build kits (including microcontroller and firmware), software licenses providing a graphical user interface and additional functionality, and turnkey systems (assembled hardware and software). Equipment leasing and testing services will also be considered as potential offerings. Anticipated pricing is provided in Table 3. An estimated initial production margin of [redacted] provides a substantial revenue stream that is anticipated to grow to a [redacted] margin with increased purchasing power, assembly efficiency, and sales growth. Follow-on revenue will include hardware/software upgrade kits and extended maintenance/service contracts beginning one year after purchase and installation.

Table 3. STEPS product and service list and pricing

[redacted]

Based on anticipated STEPS offerings and pricing, Crossroads used a Program Evaluation and Review Technique (PERT) model to estimate revenues using a weighted average of optimistic, pessimistic, and most likely scenarios for unit purchases. Estimated revenues from STEPS product and service sales (not including potential testing services) over the five years following completion of the Phase II SBIR project are shown in Table 4. Proactive marketing, technical branding, and pre-sales made during the Phase II project period will position Crossroads to ramp up quickly in the first non-SBIR year (Year 1 in Table 4) and drive peak revenues in Year 2 as potential clients react to the [redacted] standard and before potential new competitors enter the market. Additional revenues from slip-testing services and related consulting could easily support sustained annual revenues exceeding [redacted]. Reinvesting in the advancement and development of next generation devices (STEPS II, STEPS III, etc.), Crossroads could extend projected revenues an additional 5 to 10 years.

Table 4: 5-year projected revenue from STEPS (following Phase II SBIR completion)

[redacted]

Staffing

Augmenting the two current staff members, consisting of a Managing Director and Technical Director, Crossroads will hire a junior engineer to support the Phase II SBIR project, and anticipates hiring one additional staff member within 12 months after SBIR completion to support STEPS sales and marketing, order management, scheduling and delivery, and client relationship management. Additional technical hires may be considered pending a decision to offer slip-testing services.

Conclusion

Leveraging the unique attributes of STEPS – biofidelity, portable, low-cost, reliable, and predictive – Crossroads Consulting, LLC will significantly advance the state-of-the art for slip-testing technology, positioning us to reach new markets. Our agile business model will allow those with varying degrees of resources and technical competencies to access the device. STEPS will be the only slip-tester with flexible purchase options in which customers with limited resources (and reasonable technical competencies) can build their own device and customers with more resources (and/or limited technical competencies) can purchase a turnkey solution. Thus, STEPS will not only drive small business growth and revenues, but is expected to reduce slip and fall accidents through wider adoption of testing technology and more informed application of ergonomic interventions.

Multiple PD/PI Leadership Plan

I. Rationale

Project leadership and management oversight will be shared by two Principal Investigators (PIs) working in full collaboration: Dr. Brian Moyer, Crossroads Consulting, LLC, and Dr. Kurt Beschorner, University of Pittsburgh. Each of the PIs has knowledge and experience that is critical to the success of this project. Developing a robust, valid and automated slip-tester requires expertise in slip and fall tribology and testing equipment development (Beschorner) as well as software development, data acquisition, and control systems (Moyer). The PIs have complementary expertise in these areas and will work closely together to ensure the success of this project, as they did in execution of the Phase I SBIR project.

II. Governance/Organization

Communication

At a minimum, the PIs will communicate informally weekly (by phone, e-mail, or in person), and will meet monthly to discuss technical progress and next steps, identify risk and mitigation strategies, review data analysis and results to date, and ensure compliance with all administrative responsibilities. Regular joint design reviews will be conducted during prototype development to ensure technical alignment. In addition, the entire research team (including engineering support staff and graduate and undergraduate students) will meet four times per year to discuss progress and to present ongoing results. All technical project files and data will be accessible by both PIs using Dropbox and/or email.

Dr. Moyer will serve as the contact PI and be responsible for all contract communications with NIH.

Process for Making Decisions

The PIs will jointly discuss ideas and issues related to utilizing human subjects data to inform and validate the slip-tester (Aims #1 and 4) but Dr. Beschorner will have the final decision. They will jointly discuss ideas and issues related to the device development and interlaboratory study (Aims #2 and #3) but Dr. Moyer will have the final decision.

Procedures for Resolving Conflicts

If a potential conflict develops, the PIs shall meet and attempt to resolve the dispute in good faith. Issues related to the project that cannot be isolated into Specific Aims #1 through 4 and where the PIs cannot agree shall be referred to an arbitration committee consisting of one impartial member representing each PIs organization and a third impartial party mutually agreed upon by both PIs.

Intellectual Property

[redacted]

III. Roles

The two PIs will be responsible for the following roles:

Administrative

<u>Reporting</u>: Dr. Moyer will be responsible for submitting all progress reports and a final report upon review by Dr. Beschorner at the end of Years 1 and 2.

<u>Managing personnel</u>: Dr. Moyer will manage the engineer at Crossroads Consulting. Dr. Beschorner will supervise and manage the staff, post-doctoral scholar and undergraduate students at the University of Pittsburgh.

Managing the budget: Each PI will be responsible for his own fiscal and research administration based on the budget allocated per each PI's organization.

Industrial Review Board (IRB): Dr. Beschorner will be responsible for all elements of developing and managing the IRB protocol.

Technical

While the PIs will collaborate on all research objectives, Dr. Moyer will oversee aim 2 and aim 3 and will have primary responsibility for portable slip-tester development and validation. His specific technical efforts will focus on developing the control system and software for the device in Aim 2 and building the two additional prototypes for the interlaboratory study (Aim 3). Dr. Moyer also will be primarily responsible for implementing the Commercialization Plan.

Dr. Beschorner will have primary responsibility for the laboratory-focused Aims 1 and 4, including the implementation of all human subjects research and approvals and maintenance of relevant equipment. Dr. Beschorner will also contribute technically to Aim 2, leading the development and validation of the mechanical design for the prototype device.

Scientific

Drs. Moyer and Beschorner will be involved in planning, execution, analysis, and interpretation of data throughout the proposed research. Dr. Beschorner will be specifically responsible for quantifying the testing conditions that best predict slipping (Aim 1), mechanically validating the device (Hypothesis 2.1) and validating the device's ability to predict slips (Aim 4). Dr. Moyer will be specifically responsible for determining whether the device met the design objectives (Objective 2.1) and quantifying the results from the Interlaboratory Study (Aim 3). Dr. Beschorner will be primarily responsible for publications regarding Aims 1 and 4. Dr. Moyer will be primarily responsible for publications regarding Aims 2 and 3.

IV. Budget Allocation

The budget will be allocated such that each PI has adequate funds to complete their portion of the project. The main contract has adequate funds available for the contact PI (Moyer) to manage and execute his portion of the project, while the subaward to the University of Pittsburgh has adequate funds for the other PI (Beschorner) to manage and execute his portion of the project. Any significant changes in research direction that impacts budget allocations will be discussed and agreed to by both PIs.

Consortium/Contractual Arrangements

The proposed Phase II SBIR project is a cooperative research and development effort to be conducted jointly by Crossroads Consulting, LLC and the University of Pittsburgh (please reference the Letter of Intent signed by both organizations). The following outlines the programmatic, fiscal, and administrative arrangements to be implemented upon grant award.

Programmatic
Project leadership and management oversight will be shared by two Principal Investigators (PIs) working in full collaboration: Dr. Brian Moyer, Crossroads Consulting, LLC, and Dr. Kurt Beschorner, University of Pittsburgh. Management and leadership roles and responsibilities will be executed as outlined in the Multiple PD/PI Leadership Plan.

Fiscal
As the small business concern, Crossroads Consulting, LLC will perform a minimum of 50 percent of the total effort. As reflected in the proposed budget, Table 1 shows the allocation of funds to each organization. Funding levels are consistent with the scope of effort for each organization and budget period.

Table 1. Allocation of Funding for Proposed Phase II SBIR

[redacted]	[redacted]	[redacted]	[redacted]	[redacted]
[redacted]	[redacted]	[redacted]	[redacted]	[redacted]
[redacted]	[redacted]	[redacted]	[redacted]	[redacted]

Each PI will be responsible for his own fiscal administration based on the budget allocated per each organization.

Administrative
Upon grant award, Crossroads Consulting, LLC will negotiate and execute a subcontract with the University of Pittsburgh, defining the scope and deliverables, period of performance, not to exceed budget, and payment schedule and terms and addressing intellectual property and publications considerations consistent with this proposal. As applicable, the subcontract will incorporate terms and conditions from the primary award to Crossroads Consulting, LLC.

August 31, 2016

Reviewers
National Institutes of Health

Dear Reviewers:

RE: Letter of support for research proposal "Portable slip-testing device for measuring shoe-floor coefficient of friction"

This letter is to notify you of our support for the proposed research project by Crossroads Consulting, LLC and University of Pittsburgh, entitled "Portable slip-testing device for measuring shoe-floor coefficient of friction".

Prevention of falling accidents is critically important given the scale of the problem both in the United States and in Canada. Therefore, we have made the prevention of these accidents an area of emphasis at Toronto Rehabilitation Institute (TRI) -UHN. TRI has one of the most technologically advanced rehabilitation research centres in the world. At iDAPT center, we have developed a human-centred slip resistance test method by determining the maximum achievable angles that participants could walk up and down icy slopes, in a range of footwear. This test takes place in WinterLab, part of the Challenging Assessments Environments Laboratories at iDAPT center. We have already introduced this new test method to the [redacted] footwear committee and envision developing a meaningful and easy to understand labeling system for winter footwear. A multifaceted approach is required to prevent slip and fall accidents. Developing portable devices that provide valid measures of slipperiness in the field is also a critical component of this solution. Making devices portable is important since certain walking surfaces are difficult to simulate in the laboratory. Therefore, we believe that the proposed research has tremendous value and will have a great impact on fall prevention efforts.

We plan to support the proposed research efforts of the grant, by serving as a site for the inter-laboratory study.

[redacted]

References:

1. Florence, C., et al., *Estimated lifetime medical and work-loss costs of emergency department-treated nonfatal injuries-United States, 2013.* MMWR: Morbidity and mortality weekly report, 2015. **64**(38): p. 1078-1082.
2. Florence, C., et al., *Estimated lifetime medical and work-loss costs of fatal injuries-United States, 2013.* MMWR: Morbidity and mortality weekly report, 2015. **64**(38): p. 1074-1077.
3. Xu, J., et al., *Deaths: final data for 2013.* National vital statistics reports: from the Centers for Disease Control and Prevention, National Center for Health Statistics, National Vital Statistics System, 2016. **64**(2): p. 1-118.
4. Centers for Disease Control, *National Hospital Ambulatory Medical Care Survey: 2011 Emergency Department Summary Tables: Table 17*. 2012: Washington, D.C.
5. Anderson, D.E., C.T. Franck, and M.L. Madigan, *Age differences in the required coefficient of friction during level walking do not exist when experimentally-controlling speed and step length.* Journal of applied biomechanics, 2014. **30**(4): p. 542-546.
6. Bock, O. and R. Beurskens, *Age-related deficits of dual-task walking: the role of foot vision.* Gait & posture, 2011. **33**(2): p. 190-194.
7. Springer, S., et al., *Dual-tasking effects on gait variability: The role of aging, falls, and executive function.* Movement Disorders, 2006. **21**(7): p. 950-957.
8. Sterling, D.A., J.A. O'Connor, and J. Bonadies, *Geriatric falls: injury severity is high and disproportionate to mechanism.* Journal of Trauma and Acute Care Surgery, 2001. **50**(1): p. 116-119.
9. National Center for Injury Prevention and Control, *National Estimates of the 10 Leading Causes of Nonfatal Injuries Treated in Hospital Emergency Departments, United States – 2013*, C.f.D. Control, Editor. 2016: Atlanta, GA.
10. Liberty Mutual Research Institute for Safety, *2012 Liberty Mutual Workplace Safety Index*. 2012: Hopkinton, MA.
11. National Center for Injury Prevention and Control, *National Estimates of the 10 Leading Causes of Nonfatal Injuries Treated in Hospital Emergency Departments, United States – 2006*, C.f.D. Control, Editor. 2009: Atlanta, GA.
12. Courtney, T.K., et al., *Occupational slip, trip, and fall-related injuries--can the contribution of slipperiness be isolated?* Ergonomics, 2001. **44**(13): p. 1118-37.
13. Berg, W.P., et al., *Circumstances and consequences of falls in independent community-dwelling older adults.* Age and ageing, 1997. **26**(4): p. 261-268.
14. Beschorner, K.E., et al., *Effects of slip testing parameters on measured coefficient of friction.* Applied ergonomics, 2007. **38**(6): p. 773-780.
15. Blanchette, M.G. and C.M. Powers, *Slip Prediction Accuracy and Bias of the SATRA STM 603 Whole Shoe Tester.* Journal of Testing and Evaluation, 2015. **43**(3).
16. Blanchette, M.G. and C.M. Powers, *The influence of footwear tread groove parameters on available friction.* Applied ergonomics, 2015. **50**: p. 237-241.
17. Chang, W.R., et al., *The role of friction in the measurement of slipperiness, Part 2: survey of friction measurement devices.* Ergonomics, 2001. **44**(13): p. 1233-61.
18. Li, K.W., et al., *Floor slipperiness measurement: friction coefficient, roughness of floors, and subjective perception under spillage conditions.* Safety Science, 2004. **42**(6): p. 547-565.
19. Beschorner, K.E., D.L. Albert, and M.S. Redfern, *Required coefficient of friction during level walking is predictive of slipping.* Gait & Posture, 2016.
20. Hanson, J.P., M.S. Redfern, and M. Mazumdar, *Predicting slips and falls considering required and available friction.* Ergonomics, 1999. **42**(12): p. 1619-1633.
21. Lockhart, T.E. and S. Kim, *Relationship between hamstring activation rate and heel contact velocity: factors influencing age-related slip-induced falls.* Gait & posture, 2006. **24**(1): p. 23-34.
22. Lockhart, T.E., J.C. Woldstad, and J.L. Smith, *Effects of age-related gait changes on the biomechanics of slips and falls.* Ergonomics, 2003. **46**(12): p. 1136-60.
23. Chang, W.-R., C.-C. Chang, and S. Matz, *The effect of transverse shear force on the required coefficient of friction for level walking.* Human Factors: The Journal of the Human Factors and Ergonomics Society, 2011. **53**(5): p. 461-473.
24. Redfern, M.S., et al., *Biomechanics of slips.* Ergonomics, 2001. **44**(13): p. 1138-1166.

25. Burnfield, J.M. and C.M. Powers, *Prediction of slips: an evaluation of utilized coefficient of friction and available slip resistance.* Ergonomics, 2006. **49**(10): p. 982-995.
26. Siegmund, G.P., et al., *The effect of subject awareness and prior slip experience on tribometer-based predictions of slip probability.* Gait & posture, 2006. **24**(1): p. 110-119.
27. Powers, C.M. and M.G. Blanchette, *Slip Prediction Accuracy and Bias of the SATRA STM 603 Whole Shoe Tester.* Journal of Testing and Evaluation, 2014. **43**(3): p. 491-498.
28. Tsai, Y.J. and C.M. Powers, *The Influence of Footwear Sole Hardness on Slip Initiation in Young Adults*.* Journal of forensic sciences, 2008. **53**(4): p. 884-888.
29. Li, K.W., H.H. Wu, and Y.-C. Lin, *The effect of shoe sole tread groove depth on the friction coefficient with different tread groove widths, floors and contaminants.* Applied Ergonomics, 2006. **37**(6): p. 743-748.
30. Beschorner, K. and G. Singh. *A Novel Method for Evaluating the Effectiveness of Shoe-Tread Designs Relevant to Slip and Fall Accidents*. in *Human Factors and Ergonomics Society*. 2012. Boston, MA.
31. Li, K.W. and C.J. Chen, *Effects of tread groove orientation and width of the footwear pads on measured friction coefficients.* Safety Science, 2005. **43**(7): p. 391-405.
32. Chang, W.-R., M.F. Lesch, and C.-C. Chang, *The effect of contact area on friction measured with the portable inclinable articulated strut slip tester (PIAST).* Ergonomics, 2008. **51**(12): p. 1984-1997.
33. Li, K.W., et al., *Friction measurements on three commonly used floors on a college campus under dry, wet, and sand-covered conditions.* Safety Science, 2007. **45**(9): p. 980-992.
34. Strobel, C.M., et al., *Analysis of the contribution of adhesion and hysteresis to shoe–floor lubricated friction in the boundary lubrication regime.* Tribology Letters, 2012. **47**(3): p. 341-347.
35. Chang, W.R., et al., *The role of friction in the measurement of slipperiness, Part 1: friction mechanisms and definition of test conditions.* Ergonomics, 2001. **44**(13): p. 1217-32.
36. Chang, W.-R., et al., *The role of surface roughness in the measurement of slipperiness.* Ergonomics, 2001. **44**(13): p. 1200-1216.
37. Cowap, M., et al., *Contributions of adhesion and hysteresis to coefficient of friction between shoe and floor surfaces: effects of floor roughness and sliding speed.* Tribology-Materials, Surfaces & Interfaces, 2015. **9**(2): p. 77-84.
38. Grönqvist, R., *Mechanisms of friction and assessment of slip resistance of new and used footwear soles on contaminated floors.* Ergonomics, 1995. **28**: p. 224-241.
39. Li, K.W. and C.J. Chen, *The effect of shoe soling tread groove width on the coefficient of friction with different sole materials, floors, and contaminants.* Applied ergonomics, 2004. **35**(6): p. 499-507.
40. Moghaddam, S.R.M., M.S. Redfern, and K.E. Beschorner, *A Microscopic Finite Element Model of Shoe–Floor Hysteresis and Adhesion Friction.* Tribology Letters, 2015. **59**(3): p. 1-10.
41. Chang, W.R., et al., *Measuring slipperiness- discussions on the state of the art and future research*, in *Measuring Slipperiness: Human Locomotion and Surface Factors*, W.R. Chang and T.K. Courtney, Editors. 2003, Taylor & Francis: London & New York.
42. Grönqvist, R., S. Matz, and M. Hirvonen, *Assessment of shoe-floor slipperiness with respect to contact-time-related variation in friction during heel strike.* Occupational Ergonomics, 2003. **3**: p. 197-208.
43. Redfern, M.S. and B. Bidanda, *Slip resistance of the shoe-floor interface under biomechanically-relevant conditions.* Ergonomics, 1994. **37**: p. 511-524.
44. Wilson, M., *Development of Satra Slip Test and Tread Pattern Design Guidelines.* Slips, Trips, and Falls: Pedestrian Footwear and Surfaces, ASTM STP 1103, 1990: p. 113-123.
45. English, W., *Tribometer*. 1993, Google Patents.
46. Brungraber, R.J., *Portable tester for measuring slip resistance*. 1989, Google Patents.
47. Powers, C.M., et al., *Validation of walkway tribometers: establishing a reference standard.* Journal of forensic sciences, 2010. **55**(2): p. 366-370.
48. Powers, C.M., et al., *Assessment of Walkway Tribometer Readings in Evaluating Slip Resistance: A Gait-Based Approach.* Journal of forensic sciences, 2007. **52**(2): p. 400-405.
49. Allen, P. *Testing slip with SATRA STM 603*. 2016 August 23, 2016]; Available from: https://www.satra.co.uk/bulletin/article_view.php?id=1577.
50. Lamplough, D., *Slip test quote 1082790*, K. Beschorner, Editor. 2009: Unpublished.
51. Aschan, C., et al., *Development and validation of a novel portable slip simulator.* Applied Ergonomics, 2005. **36**: p. 585-593.
52. Pfannes, J. and J. Silvaggi, *UWM Technology Assessment: Biofidelic Slip-Testing Device Improves Shoe Development OTT ID# 1335*. 2011, University of Wisconsin-Milwaukee: Milwaukee, WI.

53. ASTM, *ASTM D 2047-64T: Standard Test Method fo Static Coefficient of Friction of Polish-Coated Flooring Surfaces as Measured by the James Machine*. 1964: Philadelphia, PA.
54. Janke, J.P. and D.D. Ludwin. *Objective Auditing Techniques to Control Slips And Falls In Restaurants*. in *ASSE Professional Development Conference and Exhibition*. 2008. American Society of Safety Engineers.
55. American Slip Meter, I., *Operating Instructions: Model ASM 825 Digital*. 2008: Venice, FL.
56. ASTM, *ASTM F 462-79: Standard Consumer Safety Specification for Slip-Resistant Bathing Facilities*. 1979: Philadelphia, PA.
57. NF P 18-578, *Granulats- Mesure de la rugosite d'une surface a l'aide du pendule de frottement (Aggregates- Measurement of the surface rugosity with the friction pendulum)*, in *Paris la defense: AFNOR*. 1979: Paris, France.
58. Irvine, C.H., *A New Slipmeter for Evaluating Walkway Slipperiness.* Materials Research and Standards, 1967. **18**(12): p. 535-41.
59. Grönqvist, R., et al., *An apparatus and a method for determining the slip resistance of shoes and floors by simulation of human foot motions.* Ergonomics, 1989. **32**(8): p. 979-95.
60. Tisserand, M., *Progress in the prevention of falls caused by slipping.* Ergonomics, 1985. **28**: p. 1027-1042.
61. ASTM, *ASTM F2913-11: Standard Test Method for Measuring the Coefficient of Friction for Evaluation of Slip Performance of Footwear and Test Surfaces/Flooring Using a Whole Shoe Tester*. 2011, ASTM International: West Conshohocken, PA.
62. International Standards Organization, *EN ISO 13287-2012: Personal protective equipment - Footwear-Test method for slip resistance*. 2012, ISO: Switzerland.
63. Iraqi, A., R. Cham, and K.E. Beschorner. *Assessment of slip-risk using a portable slip simulator*. in *American Society of Biomechanics*. 2015. Columbus, OH.
64. Beschorner, K.E., et al., *Fluid Pressures at the Shoe-Floor-Contaminant Interface During Slips: Effects of Tread & Implications on Slip Severity.* Journal of Biomechanics, 2014. **47**(2): p. 458-463.
65. Beschorner, K.E., D.A. Albert, and M.S. Redfern. *Individual differences in required coefficient of friction affect slip risk during level walking*. in *American Society of Biomechanics*. 2015. Columbus, OH.
66. Beschorner, K.E., M.S. Redfern, and R. Cham, *Earliest gait deviations during slips: implications for recovery.* IIE Transactions on Occupational Ergonomics and Human Factors, 2013. **1**(1): p. 31-37.
67. Skiba, R., X. Bonefeld, and D. Mellwig, *Voraussetzung zur Bestimmung der Gleitsicherheit beim menschlichen Gang.* Zeitschrift für Arbeitswissenschaft, 1983. **9**: p. 227-232.
68. Strandberg, L. and H. Lanshammar, *The dynamics of slipping accidents.* Journal of Occupational Accidents, 1981. **3**(3): p. 153-162.
69. Ullman, D.G., *The mechanical design process*. Vol. 2. 1992: McGraw-Hill New York.
70. National Floor Safety Institute, *ANSI/NFSI B101.1-2009: Test Method for Measuring Wet SCOF of Common Hard-Surface Floor Materials*. 2009, National Floor Safety Institute, : Southlake, TX.
71. Verma, S.K., et al., *A prospective study of floor surface, shoes, floor cleaning and slipping in US limited-service restaurant workers.* Occupational and environmental medicine, 2011. **68**(4): p. 279-285.
72. Moyer, B., *Slip Measurement Under Biomechanical Conditions*, in *Bioengineering*. 1996, University of Pittsburgh: Pittsburgh, PA.
73. Moore, C.T., et al., *Analysis of shoe friction during sliding against floor material: role of fluid contaminant.* Journal of Tribology, 2012. **134**(4): p. 041104.
74. Singh, G. and K.E. Beschorner, *A Method for Measuring Fluid Pressures in the Shoe-Floor-Fluid Interface: Application to Shoe Tread Evaluation.* IIE Transactions on Occupational Ergonomics and Human Factors, 2014(just-accepted): p. 00-00.
75. ASTM International. *Interlaboratory Study Program*. 2016 August 25, 2016]; Available from: http://www.astm.org/ILS/.
76. National Floor Safety Institute, *Standard Method for Conducting an Interlaboratory Study (ILS) to Establish Repeatability and Reproducibility of a Walkway Tribometer Measuring Wet Dynamic Coefficient of Friction (DCOF) for a Common Hard-Surface Walkway*. 2012: Southlake, TX.
77. National Floor Safety Institute, *Standard Method for Conducting an Interlaboratory Study (ILS) to Establish Validity, Repeatability and Reproducibility of a Walkway Tribometer Measuring Wet Static Coefficient of Friction (SCOF) for a Common Hard-Surface Walkway*. 2013: Southlake, TX.
78. Broos, R., R. Elwell, and J. Thoen, *Wear Resistance of Polyether Polyurethane Elastomers for Shoe-Sole Application.* Journal of Cellular Plastics, 1991. **27**(1): p. 92-93.

79. Beschorner, K. and R. Cham, *Impact of joint torques on heel acceleration at heel contact, a contributor to slips and falls.* Ergonomics, 2008. **51**(12): p. 1799-1813.
80. Moyer, B., *Slip and Fall Risks: Pre-Slip Gait Contributions and Post-Slip Response Effects*. 2006, University of Pittsburgh: Pittsburgh.
81. Moyer, B., et al., *Gait parameters as predictors of slip severity in younger and older adults.* Ergonomics, 2006. **49**(4): p. 329-343.
82. Leamon, T. and K. Li. *Microslip length and the perception of slipping*. in *23rd International Congress on Occupational Health, Montreal, Canada*. 1990.
83. Burnfield, J. and C. Powers, *Prediction of slip events during walking: An analysis of utilized coefficient of friction and available slip resistance.* Ergonomics, 2006. **49**(10): p. 982-985.
84. Cham, R. and M.S. Redfern, *Heel contact dynamics during slip events on level and inclined surfaces.* Safety Science, 2002. **40**(7-8): p. 559-576.
85. Cham, R. and M.S. Redfern, *Changes in gait when anticipating slippery floors.* Gait & Posture, 2002. **15**(2): p. 159-71.

Facilities and Other Resources

The combined facilities and resources of Crossroads Consulting, LLC, and the University of Pittsburgh, as described below, are conducive to the successful execution of mechanical design and prototyping, software development, validation testing, and human subjects testing in support of the proposed Phase II SBIR project.

A. Prototyping Facilities and Resources
Crossroads Consulting, LLC has more than 900 sq. ft. of prototyping and assembly space for development of the portable slip tester. This space includes light manufacturing capability (3-D printing, printed circuit board printing) and tooling for production of custom components during prototype design iterations. Crossroads Consulting also has data acquisition hardware, Arduino boards, step motor controls, and dedicated computing resources for small-scale prototyping and testing. Both PIs also have access to fee-for-use machine shops with lathes, milling machines, drill presses, etc. and a CNC machine shop for more complex jobs.

B. Laboratory Facilities and Resources
The PI (Beschorner) and his students have access to several laboratory facilities at the University of Pittsburgh including a 1285 sq. ft. Biomechanics Laboratory, a 450 sq. ft. Tribology Laboratory. In addition to the resources listed in each laboratory, the research team also has access to a 3D scanner (FaroArm®Platinum), a material testing system (ATS 900 Series) and a 3D profilometer. All of these pieces of equipment are shared resources and are located in the same building as the Biomechanics and Tribology Laboratories.

Biomechanics Laboratory
The Human Movement and Balance Lab (HMBL) within the Department of Bioengineering at the University of Pittsburgh is a specially designed space to capture the dynamics of human motion within different environments. The HMBL is capable of conducting gait studies across different floor surface, during ramp ascent and descent, during stair ascent and descent, across uneven walkways, and during induced perturbations such as slips and trips. The HMBL is equipped with several specialty pieces of equipment including: a Vicon motion capture system (Vicon Motion Systems, Oxford, UK) with fourteen T40S infrared cameras, three Bertec forceplates (4060A, Bertec Inc., Columbus, OH), a Noraxon TeleMyo electromyography system (900, Noraxon U.S.A. Inc., Scottsdale, Arizona), and a Delsys Trigno wireless electromyography and accelerometer system (Delsys Inc., Boston, MA), In addition, there is a Biodex Dynamometer strength testing system (System 2, Biodex Medical Systems, Shirley, NY) and a Solo-Step ceiling mounted harness system (Solo-Step Inc., Sioux Falls, SD) to prevent falls.

Figure 1 includes dimensions, positions for two embedded force plates, motion capture system, and the location of the moveable, overhead harness system.

All HMBL computers are secured and password protected. Each individual computer is linked with the HMBL network which allows data to be accessed by the PIs and any HMBL undergraduate or graduate students from outside the laboratory via the secured HMBL network. There is an individual workstation with the Vicon Nexus software as well as one for the National Instruments hardware and Labview software.

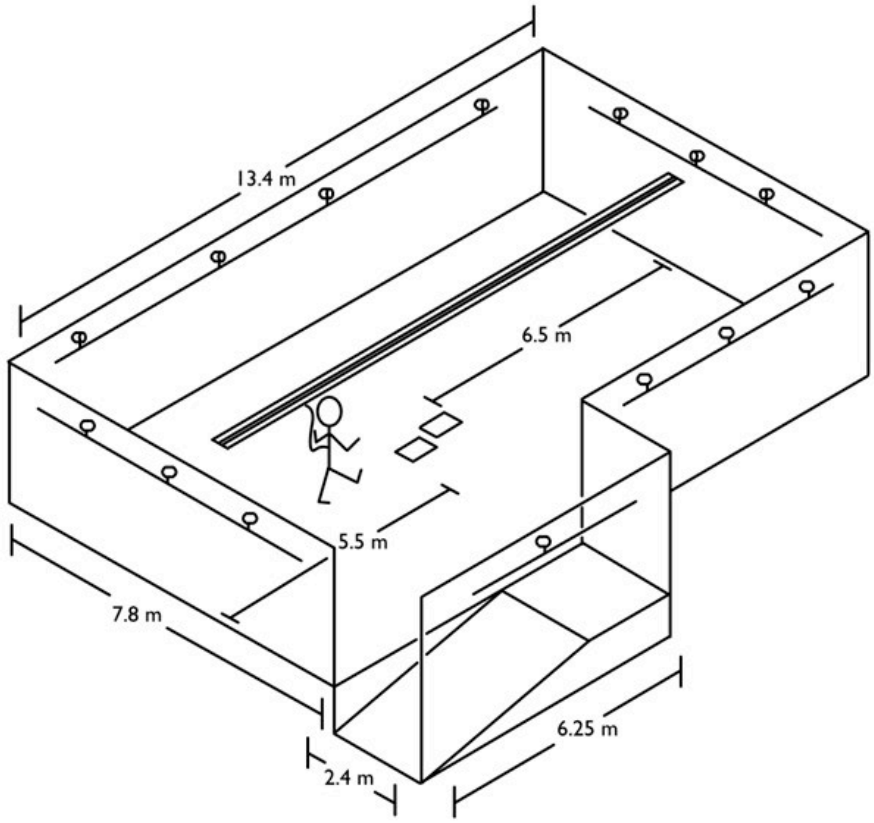

Figure 1. HMBL Schematic

Tribology Laboratory
Tribology testing resources is housed within the Augmented Human Performance Laboratory, which is directly connected to the HMBL. The testing equipment includes a pin-on-disk tribometer (Contraves), a custom whole-shoe slip (Portable Slip Simulator) and wear-tester, a variable incidence tribometer (English XL), a 2D Stylus Profilometer (Taylor-Hobson Surtronic S100), a viscometer (Brookfield LVDVE 115), and a precision scale.

C. Office Facilities and Resources
Both PIs and the research team have access to well-equipped office facilities for meetings, data analysis, software development, and reporting. Within the Department of Bioengineering at the University of Pittsburgh, the team has access to multiple conference rooms and meeting spaces for design reviews and other collaborative activities.

D. Other Resources
Support for Early Stage Investigators
University of Pittsburgh makes several resources available for early stage investigators including a mentorship program where new faculty are teamed up with a committee of mentors. The Department of Bioengineering has extensive administrative support that is available to Early Stage Investigators including a department administrator, an academic administrator, a graduate school administrator, a personnel coordinator, two purchasing administrators and an IT specialist.

Statistical Support through the Clinical and Translational Science Institute (CTSI)
The PI (Beschorner) has access to statistical support as a member of the University of Pittsburgh CTSI. The CTSI provides up to 10 hours of free statistical support per project and prioritizes access for junior faculty members. In addition, the CTSI also provides statistical training through workshops and journal clubs.